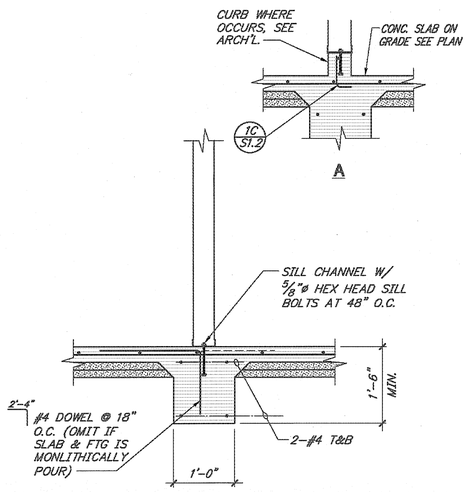


INTERIOR FOOTING | NONE | 1

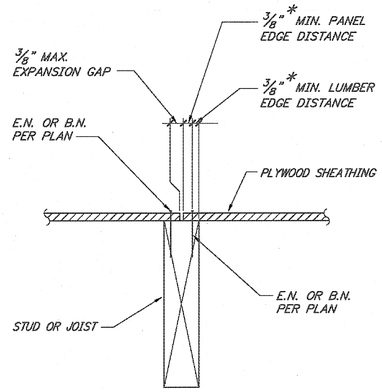


TYP. PLYWOOD NAILING DETAIL | NONE | 2

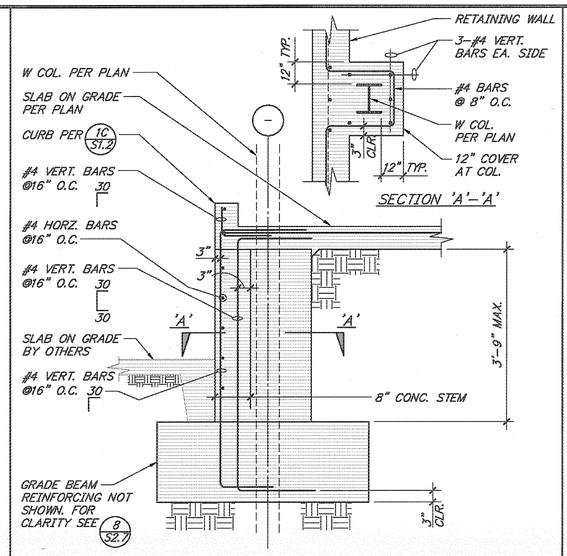


DETAIL | NONE | 3

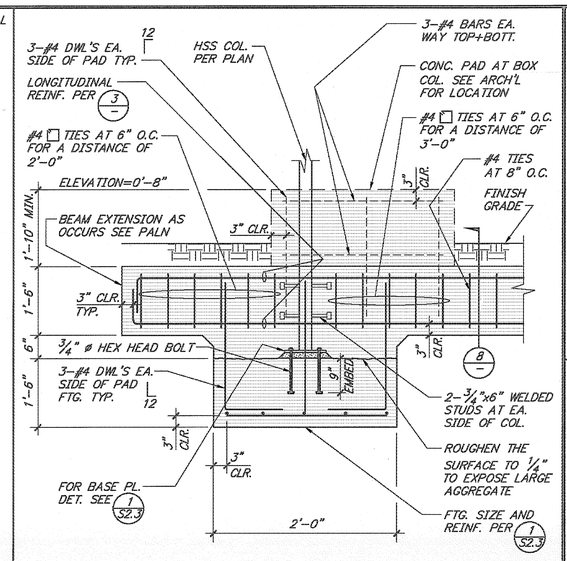


DETAIL | NONE | 4

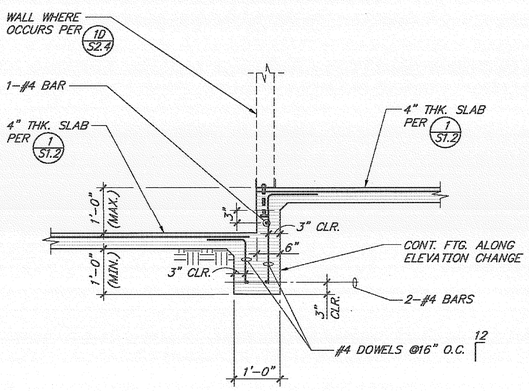


DETAIL | NONE | 5

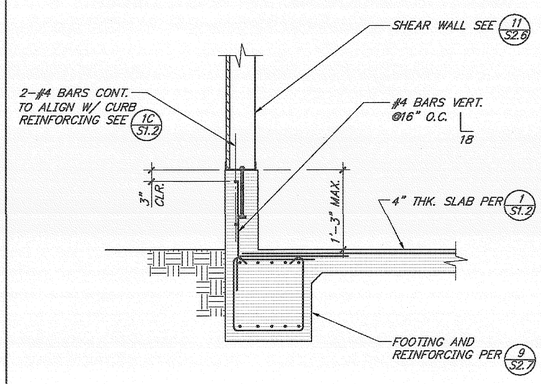


DETAIL | NONE | 6

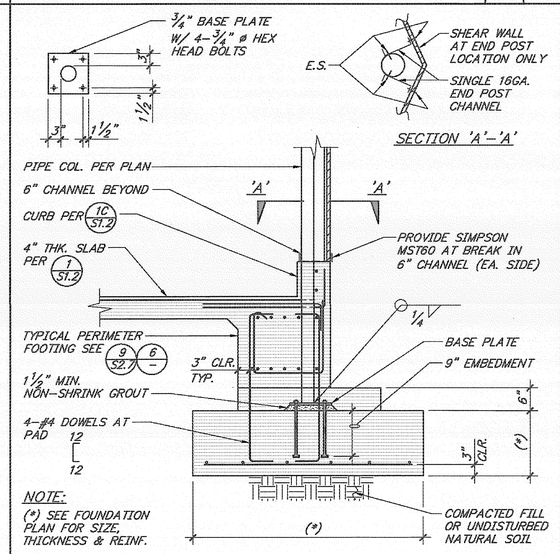


DETAIL | NONE | 7

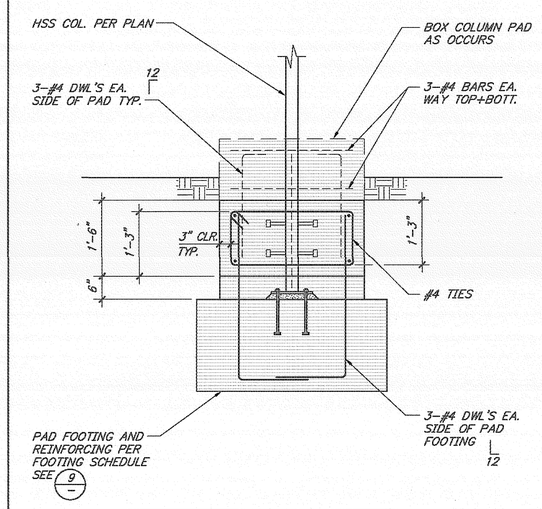


SECTION | NONE | 8

| COLUMN SCHEDULE | |
|---|---|
| MARK | SIZE |
| 1 | W14x82 |
| 2 | HSS8x8x1/2 |
| 3 | 8" ø STD PIPE |
| 4 | HSS4x4x5/16 |
| 5 | 3" ø STD PIPE |

| FOOTING SCHEDULE | | | | |
|---|---|---|---|---|
| TYPE | SIZE | THICK. | REINFORCING BOT. BARS | REMARKS |
| A | 3'-0"x3'-0" | 1'-6" | 3-#5 E.W. | |
| B | 4'-0"x4'-0" | 1'-6" | 4-#5 E.W. | |
| C | 8'-0"x8'-0" | 2'-0" | 7-#5 E.W. | |
| D | 2'-0"x2'-0" | 1'-6" | 3-#5 E.W. | |

COLUMN & FOOTING SCHEDULE | NONE | 9

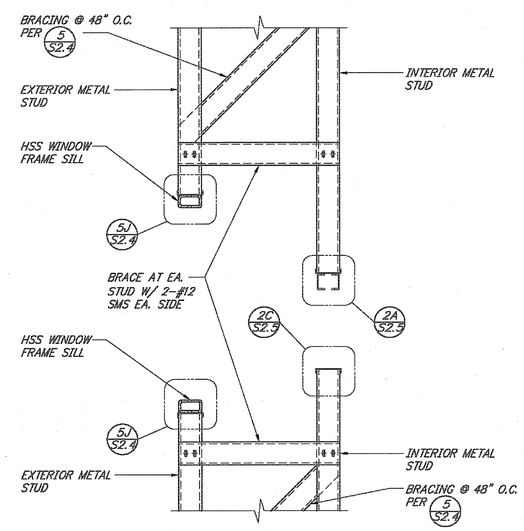


DETAIL | NONE | 10

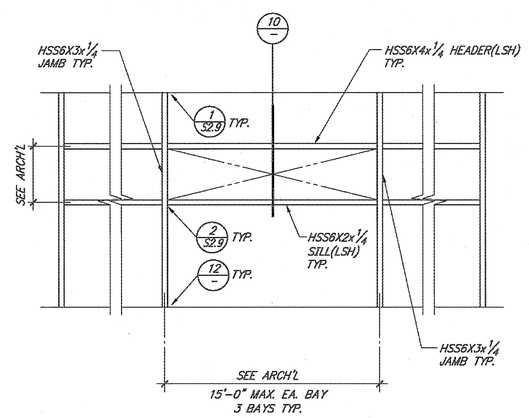


DETAIL | NONE | 11

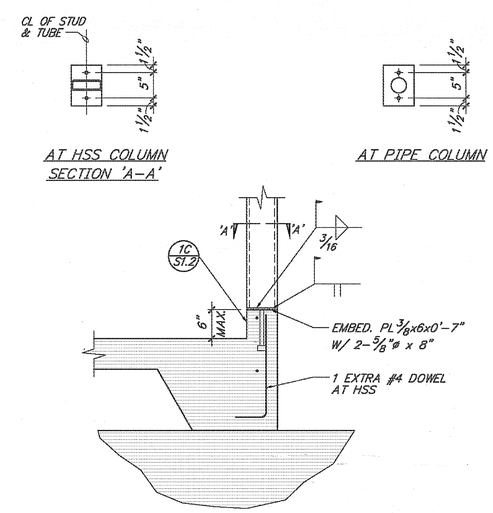


POST CONNECTION | NONE | 12


MIG
MOORE IACOFANO GOLTSMAN, INC.
801 N. HARBOR BLVD. FULLERTON, CA 92831
TEL 714/871-3559 FAX 714/871-1189
www.migcorp.com

PITASSI ARCHITECTS, INC.
8439 White Oak Ave., Suite. 105
Rancho Cucamonga, Ca 91730
Tel. 909-980-1361 ▪ Fax. 909-944-5814
e-mail. pipaia@pitassiarchitects.com

CONSULTANT:
TMAD TAYLOR & GAINES
▪ STRUCTURAL ▪ MECHANICAL ▪ ELECTRICAL ▪ CIVIL
800 North Ferrari Lane, Suite 100
Ontario, California 91764
Phone: 909.477.6915 Fax: 909.477.6919
www.tmadtg.com Project No. 4008.056.00


# PERRIS VALLEY Big League Dreams

2155 Trumble Road
Perris, California 92570

SHEET TITLE

100% CONSTRUCTION DOCUMENT

| DATE | REVISIONS |
|---|---|
| | |

STAMP

REGISTERED PROFESSIONAL ENGINEER
SERRY C. TSANG
No. S2992
Exp. 06/30/2010
STRUCTURAL
STATE OF CALIFORNIA

| CHECKED BY | DATE |
|---|---|
| SY | . |

| | |
|---|---|
| DATE 01-07-10 | FILE NAME |
| DRAWN BY DG | SHEET S-2.8 |
| JOB NO. 05208.00 | OF SHEETS |
| SCALE NOTED | |