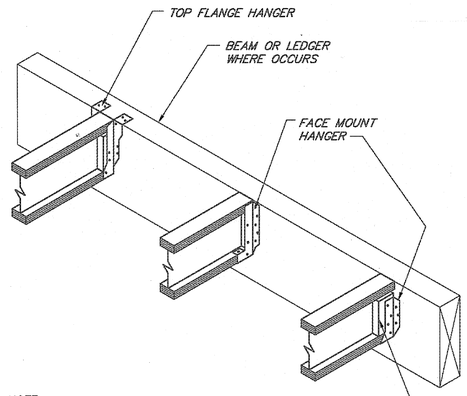


NOTE:
WEB STIFFENERS ARE REQD. IF THE SIDES OF THE HANGER DO NOT LATERALLY SUPPORT THE TJI JOIST TOP FLANGE

## TYPICAL TJI HANGER DETAIL — NONE — 1

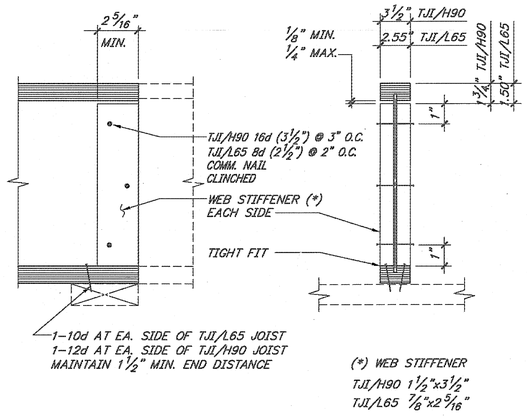


NOTES:
1. WEB STIFFENER MATERIAL SHALL BE SHEATHING MEETING THE REQUIREMENTS OF PS1 OR PS2 WITH FACE GRAIN PARALLEL TO LONG AXIS.
2. 2x4 CONSTRUCTION GRADE OR BETTER.

## TYPICAL WEB STIFFENER DETAIL — NONE — 2

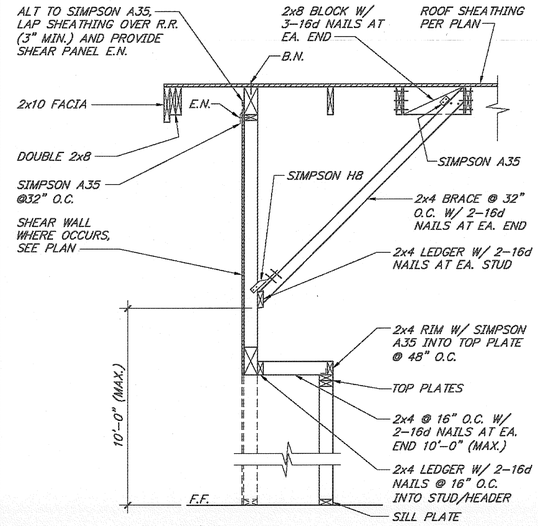


## DETAIL — NONE — 3

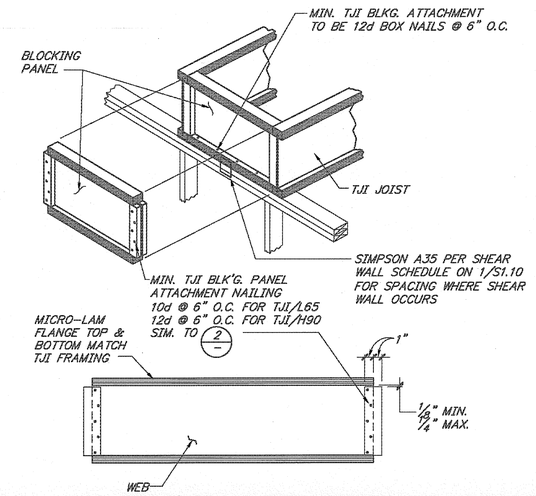


## TYPICAL TJI BLOCKING DETAIL — NONE — 4

NOT USED — - — 5

NOT USED — - — 6

NOT USED — - — 7

NOT USED — - — 8

NOT USED — - — 9

NOT USED — - — 10

NOT USED — - — 11

NOT USED — - — 12


MIG
MOORE IACOFANO GOLTSMAN, INC.
801 N. HARBOR BLVD. FULLERTON, CA 92831
TEL 714/871-3638 FAX 714/871-1189
www.migcom.com

PITASSI ARCHITECTS, INC.
8439 White Oak Ave., Suite 105
Rancho Cucamonga, Ca 91730
Tel. 909-980-1361 ▪ Fax. 909-944-5814
e-mail. pjpaia@pitassiarchitects.com

CONSULTANT:
TMAD TAYLOR & GAINES
• STRUCTURAL • MECHANICAL • ELECTRICAL • CIVIL
800 North Ferrari Lane, Suite 100
Ontario, California 91764
Phone: 909.477.6915 Fax: 909.477.6919
www.tmadtg.com Project No. 4008.056.00


# PERRIS VALLEY Big League Dreams

2155 Trumble Road
Perris, California 92570

SHEET TITLE

100% CONSTRUCTION DOCUMENT

| DATE | REVISIONS |
|---|---|
| | |

STAMP

REGISTERED PROFESSIONAL ENGINEER — SY C. TSANG — No. S2992 — Exp. 06/30/2010 — STRUCTURAL — STATE OF CALIFORNIA

| CHECKED BY | DATE |
|---|---|
| SY | |

| | |
|---|---|
| DATE 01-07-10 | FILE NAME |
| DRAWN BY DG | SHEET S-3.7 |
| JOB NO. 05208.00 | |
| SCALE NOTED | OF SHEETS |