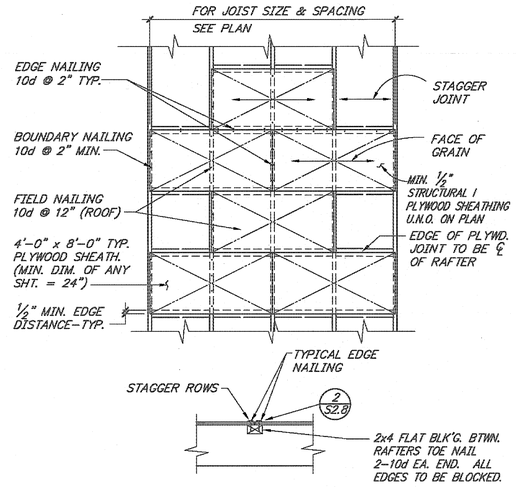


SECTION AT FLAT BLOCKING

## TYP. PLYWOOD ROOF SHEATHING DETAIL — NONE — 1

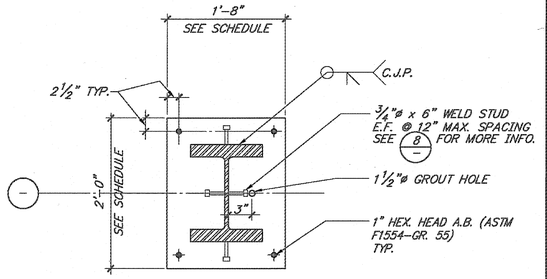


NOTE:

1. PROVIDE 1 1/16"ø HOLE FOR 1"ø A.B. OR AT CONTRACTOR'S OPTION TO PROVIDE 1 1/2"ø HOLE WITH 3/8" x 3" SQ. WELD WASHER.

## FRAME COLUMN BASE PLATE DETAILS — NONE — 2

| MK | WIDTH | DEPTH | BOTTOM BAR REINFORCING | TOP BAR REINFORCING | SKIN REINF. AT MID-DEPTH | * TIE U.N.O. #4@8"O.C. | TOP OF G.B. FROM 0'-0" |
|---|---|---|---|---|---|---|---|
| GB-1 | 4'-0" | 2'-6" | 6-#7 (*) | 6-#7 (*) | 1-#5 EA. FACE | | -4'-0" |
| GB-2 | 7'-0" | 4'-0" | 11-#7 (*) | 11-#7 (*) | 3-#5 EA. FACE | | -4'-0" |
| GB-3 | 1'-6" | 1'-6" | 4-#5 (*) | 4-#5 (*) | - | | -1'-2" |

(*) LOCATE REINFOCING TO MISS W COL. TYP. ADDITIONAL (2ND) LAYER WHERE REQUIERD, SEE 8 AND REINFORCING SPACING PER 6 S1.3

## CONCRETE GRADE BEAM SCHEDULE — NONE — 3


MIG
MOORE IACOFANO GOLTSMAN, INC.
601 N. HARBOR BLVD.
FULLERTON, CA 92831
TEL 714/871-2638
FAX 714/871-1169
www.migcom.com

PITASSI ARCHITECTS, INC.
8439 White Oak Ave., Suite 105
Rancho Cucamonga, Ca 91730
Tel. 909-980-1361 ▪ Fax. 909-944-5814
e-mail. pjpaia@pitassiarchitects.com

CONSULTANT:
TMAD TAYLOR & GAINES
▪ STRUCTURAL
▪ MECHANICAL
▪ ELECTRICAL
▪ CIVIL
800 North Ferrari Lane, Suite 100
Ontario, California 91764
Phone: 909.477.6915 Fax: 909.477.6919
www.tmadtg.com Project No. 4008.056.00


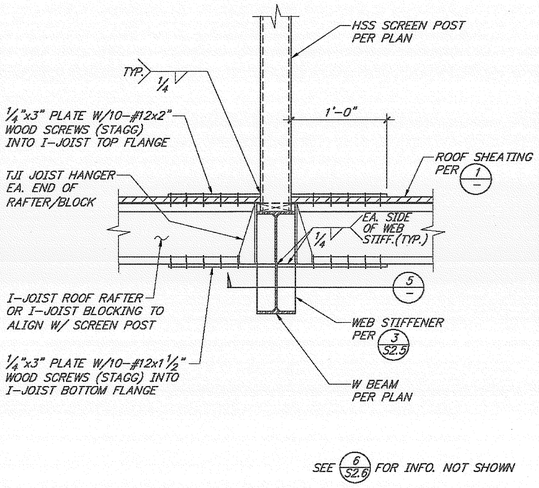


## DETAIL — NONE — 4

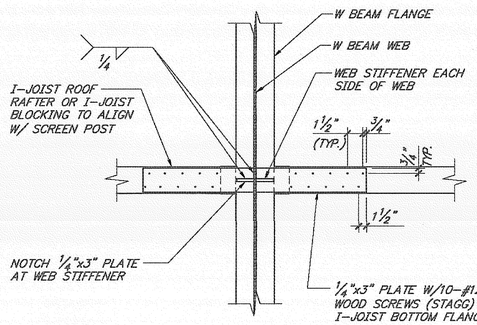


## SECTION — NONE — 5

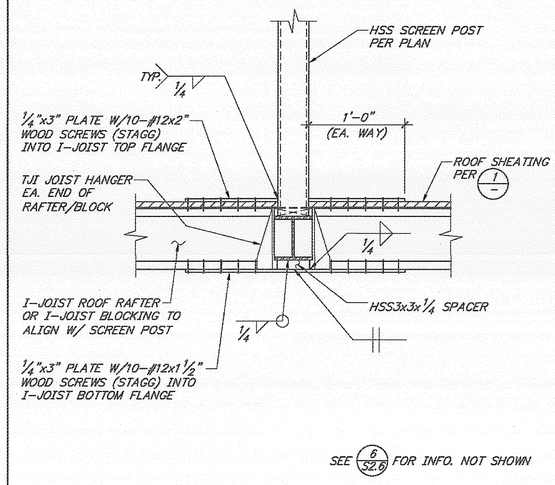


## DETAIL — NONE — 6

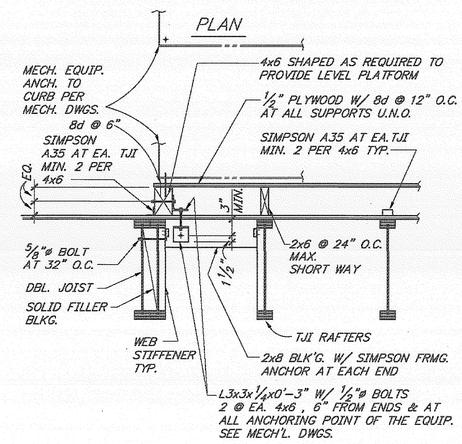


## MECHANICAL EQUIPMENT PLATFORM — NONE — 7

PERRIS VALLEY Big League Dreams

2155 Trumble Road
Perris, California 92570

SHEET TITLE

100% CONSTRUCTION DOCUMENT

| DATE | REVISIONS |
|---|---|
| | |

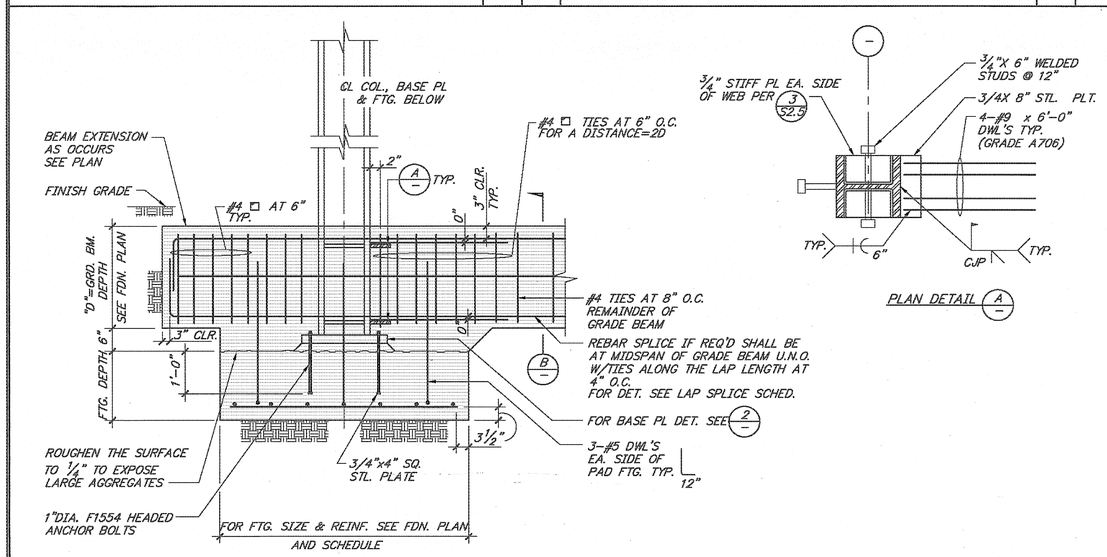





PLAN DETAIL A

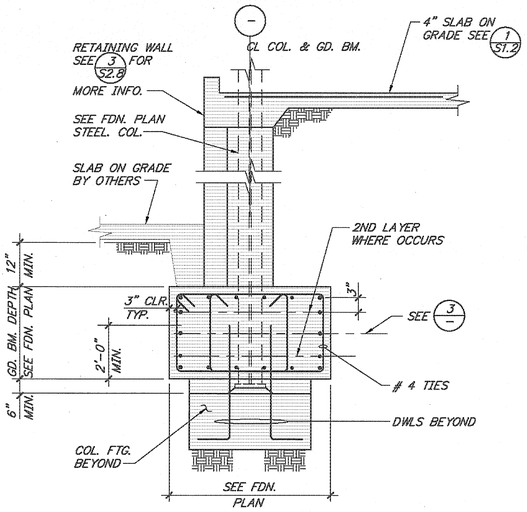


SECTION "B"

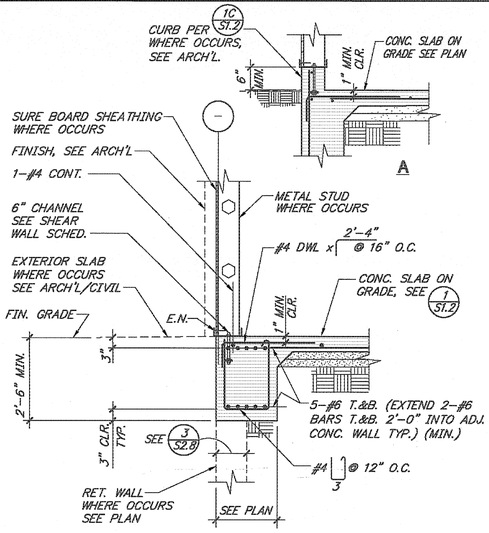


* POUR CURB MONOLITHICALLY WITH FOOTING, TYP.

## TYP. GRADE BEAM SECTION (END CONDITION) — NONE — 8

## TYPICAL PERIMETER FOOTING — NONE — 9

STAMP

REGISTERED PROFESSIONAL ENGINEER
CORY C. TSANG
No. S2992
Exp. 06/30/2010
STRUCTURAL
STATE OF CALIFORNIA

| CHECKED BY | DATE |
|---|---|
| SY | . |
| DATE 01-07-10 | FILE NAME |
| DRAWN BY DG | SHEET S-2.7 |
| JOB NO. 05208.00 | OF SHEETS |
| SCALE NOTED | |