| TYP. BEAM CONNECTION SCHEDULE | | | | |
|---|---|---|---|---|
| BEAM SIZE | CONNECTION PLATE THK. | CONNECTION* PLATE WELD | NO. OF BOLTS | BOLT SIZE (SC) BOLTS |
| CB, WB, W10 | 3/8" | 1/4" | 2 | 1"ø H.S.B. |
| C OR MC12 W12, W14 | 3/8" | 5/16" | 3 | 1"ø H.S.B. |
| W 16 | 3/8" | 5/16" | 4 | 1"ø H.S.B. |
| W 18 | 1/2 | 3/8" | 5 | 1"ø H.S.B. |
| W 21 | 1/2 | 3/8" | 6 | 1"ø H.S.B. |
| W 24 | 1/2 | 3/8" | 7 | 1"ø H.S.B. |
| W 27 | 1/2 | 3/8" | 7 | 1"ø H.S.B. |
| W 30 | 5/8 | 1/2" | 8 | 1"ø H.S.B. |
| W 33 | 5/8 | 1/2" | 9 | 1"ø H.S.B. |
| W 36, W 40 | 5/8 | 1/2" | 9 | 1"ø H.S.B. |

* NOTE:

1. WHERE CONNECTION PLATE IS NOT PERPENDICULAR TO BEAM OR COLUMN WEB OR FLANGES, USE COMPLETE PENETRATION BEVEL WELD. SEE 1E & 1F
2. WHERE NUMBER OF BOLTS NOTED IN SCHEDULE CANNOT BE IN A SINGLE ROW, ADD SECOND ROW WITH TWO BOLTS MIN.
3. STIFF. PL. THK. WHERE NOT SPECIFIED SHALL BE SAME THK. AS CONN. PL. TYP. U.N.O.
4. ALL BOLTS ARE HSB, (A325 SC)

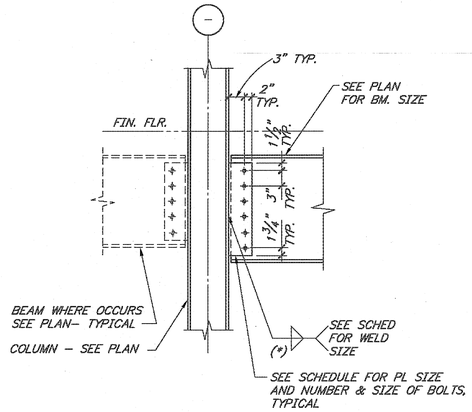


A AT COLUMN FLANGE

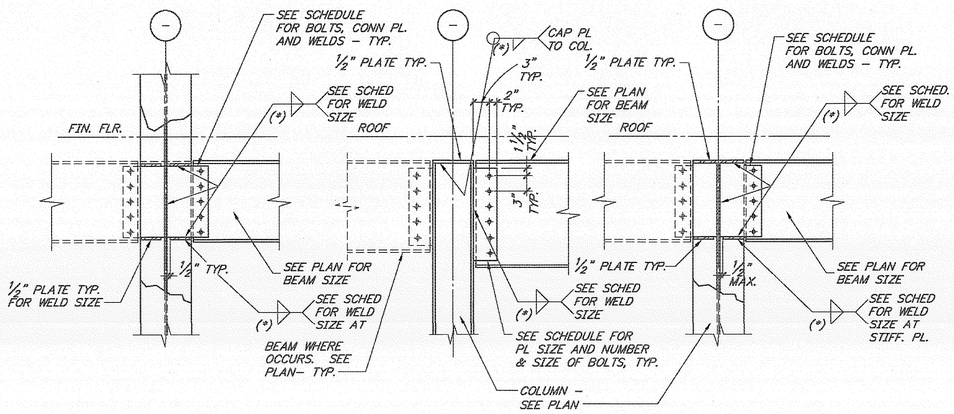


B AT COLUMN WEB  C AT COLUMN FLANGE (ROOF)  D AT COLUMN WEB (ROOF)

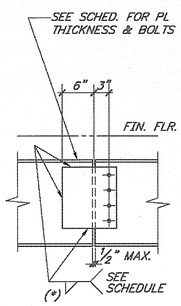


E BEAM SPLICE

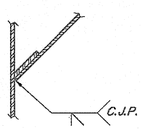


F SKEWED BEAM

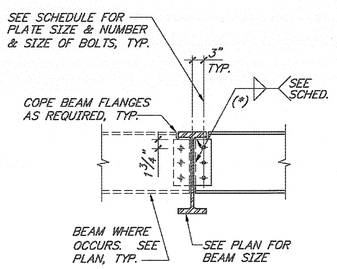


G BEAM TO BEAM

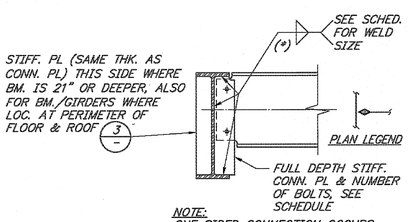


NOTE:
ONE SIDED CONNECTION OCCURS WHERE OPPOSITE BEAMS ARE OFFSET BY 12" OR MORE.

J ONE SIDE BM. CONN.

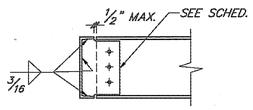


K CHANNEL

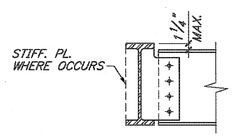


L DROPPED BEAM

TYPICAL BEAM TO BEAM AND BEAM TO COLUMN CONNECTION DETAILS AND SCHEDULE | NONE | 1

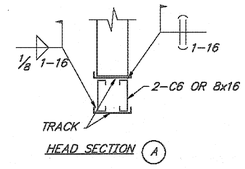


HEAD SECTION A

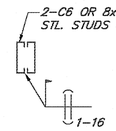


JAMB SECTION B
W=0' TO 4'–0"

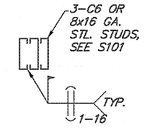


JAMB SECTION B
W=4'–1" TO 8'–0"

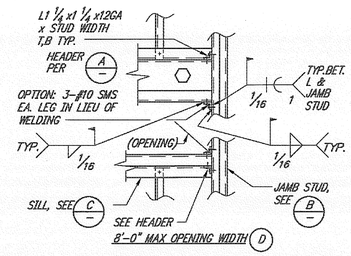


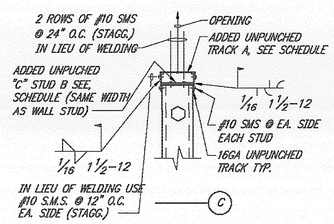


| SILL SCHEDULE | | |
|---|---|---|
| SILL LENGTH | 'A' | 'B' |
| UP TO 4'–0" | NOT REQ'D | NOT REQ'D |
| 4'–1" TO 8'–0" | 16GA | 16GA |

NOTE:
SEE ARCH'L. FOR WINDOW TYPE AND S801 & S802 FOR HSS SUPPORT

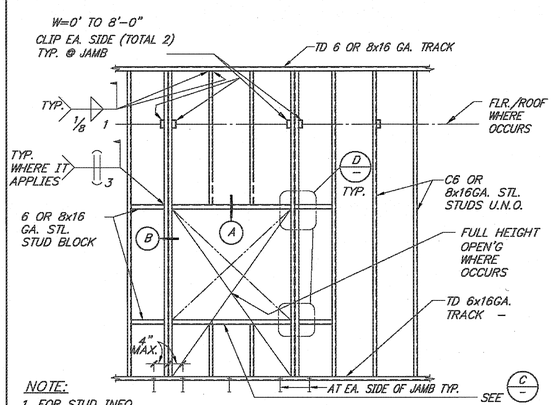


NOTE:

1. FOR STUD INFO. SEE SHT. S101
2. OPENING WIDTH OVER 8'–0" MAX. REFER TO SHT. 10/S2.8.

TYP. EXTERIOR WALL FRAMING DETAIL | NONE | 2

NOTE:
(*) ¼" MIN. WELD

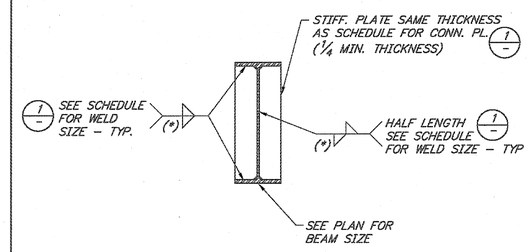


TYPICAL STIFFENER PLATE DETAIL | NONE | 3

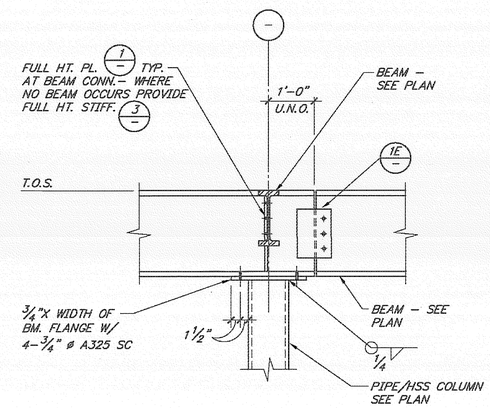


TYP. BEAM AT HSS/PIPE COLUMN DET. | NONE | 4

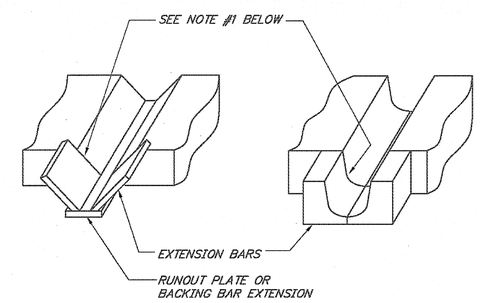


NOTES:

1. COMPLETE JOINT PENETRATION WELD OR PARTIAL JOINT PENETRATION WELD HAVING EFFECTIVE DEPTH 1/16" DEEPER THAN THE FUSION ZONE OF THE BASE METAL.
2. ALL BACKING BARS SHALL BE REMOVED AND THE ROOT PASS SHALL BE BACKGOUGED TO SOUND WELD METAL. A REINFORCING FILLET WELD, AT LEAST ¼ OF FLANGE THICKNESS, BUT NOT GREATER THAN ⅜ INCH, SHALL BE APPLIED AND THE JOINT SHALL BE ULTRASONICALLY TESTED.

WELD TERMINATION/GROOVE WELD BACKING | NONE | 5


MIG
MOORE IACOFANO GOLTSMAN, INC.
801 N. HARBOR BLVD. FULLERTON, CA 92831
TEL 714/871-3638 FAX 714/871-1169
www.mig-pc.com

PITASSI ARCHITECTS, INC.
8439 White Oak Ave., Suite. 105
Rancho Cucamonga, Ca 91730
Tel. 909-980-1361 ▪ Fax. 909-944-5814
e-mail. pjpaia@pitassiarchitects.com

CONSULTANT:
TMAD TAYLOR & GAINES
▪ STRUCTURAL ▪ MECHANICAL ▪ ELECTRICAL ▪ CIVIL
800 North Ferrari Lane, Suite 100
Ontario, California 91764
Phone: 909.477.6915 Fax: 909.477.6919
www.tmadtg.com Project No. 4008.056.00


# PERRIS VALLEY Big League Dreams

2155 Trumble Road
Perris, California 92570

SHEET TITLE

100% CONSTRUCTION DOCUMENT

| DATE | REVISIONS |
|---|---|
| | |

STAMP

REGISTERED PROFESSIONAL ENGINEER — SOBY C. TSANG — No. S2992 — Exp. 12/31/2010 — STRUCTURAL — STATE OF CALIFORNIA

| CHECKED BY | DATE |
|---|---|
| SY | . |
| DATE 01-07-10 | FILE NAME |
| DRAWN BY DG | SHEET S-2.5 |
| JOB NO. 05208.00 | OF SHEETS |
| SCALE NOTED | |