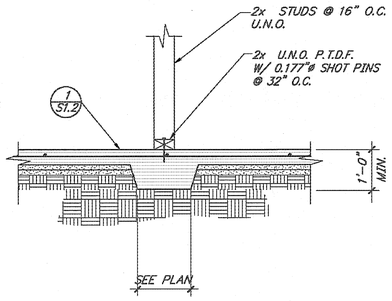


## TYP. NON-BEARING WALL DETAIL — NONE — 1

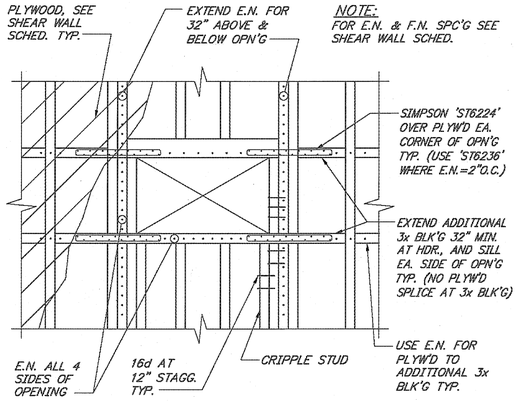


NOTE:
1. FOR ADDITIONAL NAILING, BLK'G & PLYW'D DETAIL SEE TYP. SHEAR WALL DETAILS.
2. FOR FRAMING DET. SEE STUD WALL FRAMING DETAIL 1/S3.4 UNLESS NOTED OTHERWISE.

## TYPICAL OPENING AT SHEAR WALL — NONE — 2

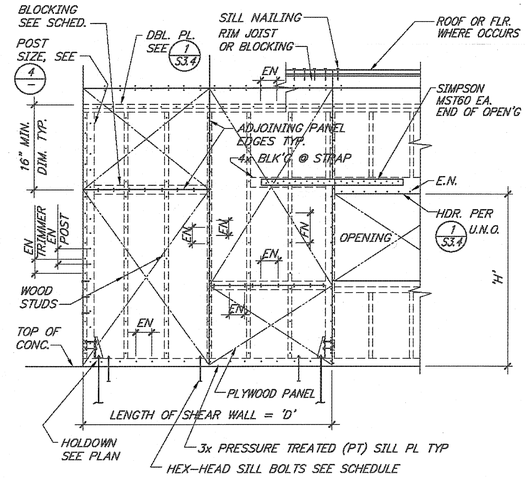


| PLYWOOD SHEAR WALL SCHEDULE | | | | | | | |
|---|---|---|---|---|---|---|---|
| SHEAR WALL MARK | PLYWOOD THICKNESS AND (TYPE) | NO. OF SIDES | SHEAR WALL NAILING (1) NAIL SIZE AND SPACING: SIZE | EDGE NAIL E.N. | FIELD NAIL F.N. | SILL BOLTS | MAX. SHEAR |
| 1 | 15/32 (STRUCT. 1) | 1 | 10d | 6 | 12 | 5/8"ø @ 32" O.C. | 340 |
| 2 | 15/32 (STRUCT. 1) | 1 | 10d | 4 | 12 | 5/8"ø @ 16" O.C. | 510 |
| 3 | 15/32 (CDX) | 1 | 8d | 4 | 12 | 5/8"ø @ 16" O.C. | 380 |
| 4 | 15/32 (STRUCT. 1) | 1 | 10d | 3 | 12 | 5/8"ø @ 16" O.C. | 665 |
| 5 | 15/32 (STRUCT. 1) | 1 | 10d | 2 | 12 | 5/8"ø @ 16" O.C. | 870 |

NOTE:
(1) NAILS TO BE STAGGERED AT ADJOINING PANEL EDGES.
(2) PROVIDE 3x BLKG. @ ALL UNSUPPORTED PLYWOOD JOINTS AND EDGES.
(3) PROVIDE 3/8" NAILING EDGE DIST. FOR 2x BLK. @ 1/2" E. DIST. FOR 3x BLKG.
(4) PROVIDE 1/2" MIN. SEPARATION BETWEEN THE STRUCT. PLYWOOD & CONCRETE.
(5) MINIMUM PANEL DIMENSION IS 1'-4". USE FULL SIZE PANELS WHERE POSSIBLE.
(6) ALL NAILS SHALL BE COMMON NAILS, SINKER OR BOX NAILS ARE NOT PERMITTED.
(7) OVER DRIVEN NAILS INTO PLYWOOD SHEATHING IS NOT ACCEPTABLE. ANY SHEATHING WITH OVER DRIVEN NAILS SHALL BE REPLACED AT CONTRACTORS EXPENSE.
(8) ALL STRAPS TO BE PLACED OVER TOP OF PLYWOOD.
(9) PROVIDE HOLDOWN FOR ALL THE MARKED SHEAR WALL AS NOTED ON PLANS. HOLDOWN, SEE DET. 4/- FOR SCHEDULE.
(10) PROVIDE STRAP AT TOP OF OPENING WHERE 'D' IS LESS THAN 1/2 H.
(11) MINIMUM NAIL PENETRATION IN FRAMING IS 1 5/8 INCHES.
(12) PROVIDE 3x STUD AND 3x BLOCKING AT ADJUSTING PANEL EDGES WHERE NAILING SPACING IS LESS THAN 6" O.C.

## TYPICAL SHEAR WALL SCHEDULE — NONE — 3


MIG
MOORE IACOFANO GOLTSMAN, INC.
801 N. HARBOR BLVD. FULLERTON, CA 92831
TEL 714/871-3533 FAX 714/871-1188
www.migcorp.com

PITASSI ARCHITECTS, INC.
8439 White Oak Ave., Suite. 105
Rancho Cucamonga, Ca 91730
Tel. 909-980-1361 ▪ Fax. 909-944-5814
e-mail. pjpaia@pitassiarchitects.com

CONSULTANT:
TMAD TAYLOR & GAINES
▪ STRUCTURAL ▪ MECHANICAL ▪ ELECTRICAL ▪ CIVIL
800 North Ferrari Lane, Suite 100
Ontario, California 91764
Phone: 909.477.6915 Fax: 909.477.6919
www.tmadtg.com Project No. 4008.056.00


| HOLDOWN SCHEDULE | | | | | | | | | | |
|---|---|---|---|---|---|---|---|---|---|---|
| MARK | SIMPSON HOLDOWN MODEL | BOLTS TO POST | SCREWS TO POST | BOLT END DISTANCE "CL" MIN. | ANCH. PL WASHER SIZE | ANCHOR SIZE | ANCHOR EMBED'T. "E" MIN. | MIN. HOLD DOWN POST * | HOLDOWN ANCHOR SIMPSON SST BOLT TYP. (PHD) STANDARD BOLT (HD) | CAPACITY UPLIFT |
| 1 | HD2A | (2)-5/8"ø | – | 4 1/2" | 3 1/2"x3 1/2"x1/2" | 5/8"ø | 18" | 4x6 | STD. BOLT (HD) | 2775 |
| 2 | HD5A | (2)-3/4"ø | – | 5 1/4" | 3 1/2"x3 1/2"x1/2" | 5/8"ø | 18" | 4x6 | STD. BOLT (HD) | 4010 |
| 3 | HD8A | (3)-7/8"ø | – | 6 3/16" | 3 1/2"x3 1/2"x1/2" | 7/8"ø | 18" | 4x6 | STD. BOLT (HD) | 8065 |
| 4 | HD14A | (4)-1"ø | – | 7" | 3 1/2"x3 1/2"x1/2" | 1"ø | 18" | 6x6 | STD. BOLT (HD) | 13380 |
| 5 | HD8A | (3)-7/8"ø | – | 6 3/16" | – | 7/8"ø | 16 5/8" | 2–2x6 | SSTB20 | 6465 |
| 6 | HD10A | (4)-7/8"ø | – | 6 3/16" | – | 7/8"ø | 24 7/8" | 3–2x6 | SSTB28 | 10235 |
| 7 | HD6A | (2)-3/4"ø | – | 6 3/16" | – | 7/8"ø | 16 5/8" | 2–2x6 | SSTB20 | 4405 |

* SEE DETAIL 1/S3.4 FOR JAMB SIZE. LARGER MEMBER GOVERNS.

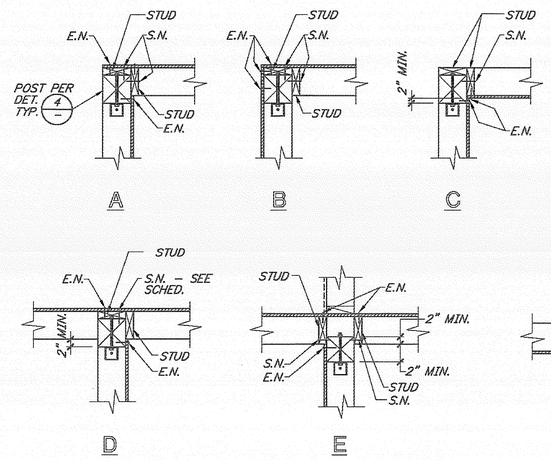


| SCHEDULE FOR SHEAR WALL STUD ATTACHMENT TO HOLDOWN POST | | | | | | | | |
|---|---|---|---|---|---|---|---|---|
| NAIL SPACING | NAILED STUD | | STUD W/LAG SCREW | | | STUD W/ THRU BOLTS | | |
| | STUD THK. | NAIL | STUD THK. | LAG SCREW | SPC'G. | STUD THK. | BOLT | SPC'G. |
| 4"O.C. | 2x | 2 ROWS 16d @ 4 | 2x | 5/8"ø x6" | 16"O.C. | 2x | 3/4" | 18"O.C. |
| 3"O.C. & 2"O.C. | 2x | 2 ROWS 16d @ 3 | 2x | 5/8"ø x6" | 12"O.C. | 3x | 3/4" | 16"O.C. |

*S.N. – 16d @ 12" O.C. STAGG. TYP.

## TYPICAL SHEARWALL INTERSECTION DETAIL — NONE — 5

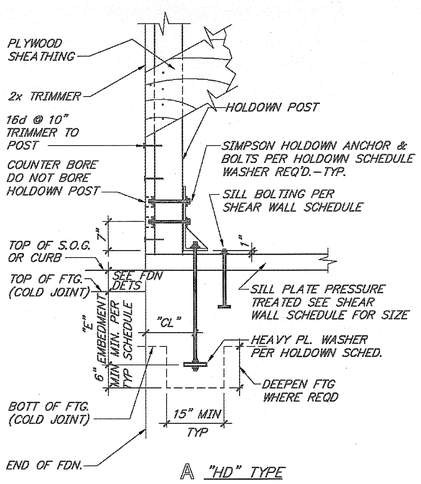


A "HD" TYPE

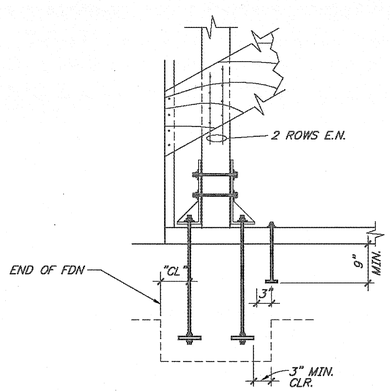


B DBL "HD" TYPE
INFO NOT NOTED OR SHOWN, SEE "A"

## TYPICAL HOLD DOWN ANCHOR DETAILS — NONE — 4

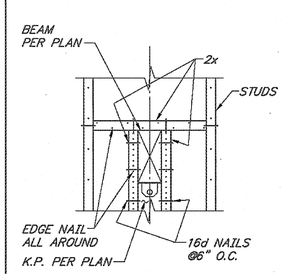


DETAIL OF OPENING IN SHEAR WALL

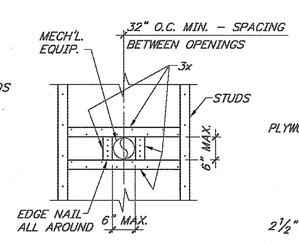


DETAIL OF OPENING IN SHEAR WALL

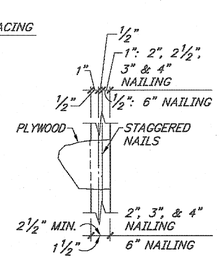


PLAN
TYP. BOUNDARY & EDGE NAILING

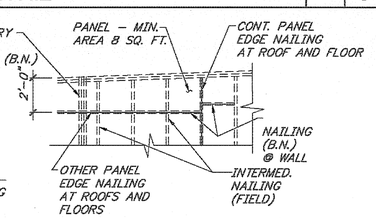


SLOPING TOP PLATE OR SKEW JOIST

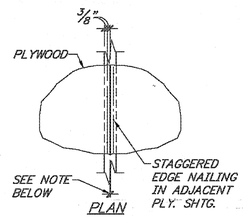


PLAN
TYP. STAGGERED EDGE NAILING FOR 6" SPACING

NOTE:
CONTRACTOR TO OBTAIN ENGINEERS APPROVAL FOR LOCATION AND SPACING OF OPENING

## TYPICAL PLYWOOD WALL SHEATHING DETAILS — NONE — 6

PERRIS VALLEY Big League Dreams
2155 Trumble Road
Perris, California 92570

SHEET TITLE

100% CONSTRUCTION DOCUMENT

| DATE | REVISIONS |
|---|---|
| | |

STAMP
REGISTERED PROFESSIONAL ENGINEER — SONY C. TSANG — No. S2992 — Exp. 12/31/2010 — STRUCTURAL — STATE OF CALIFORNIA

| CHECKED BY | DATE |
|---|---|
| SY | . |
| DATE 01-07-10 | FILE NAME |
| DRAWN BY DG | SHEET S-3.3 |
| JOB NO. 05208.00 | OF SHEETS |
| SCALE NOTED | |