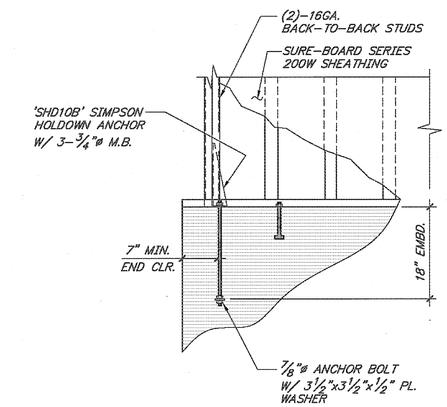


DETAIL 1" 1

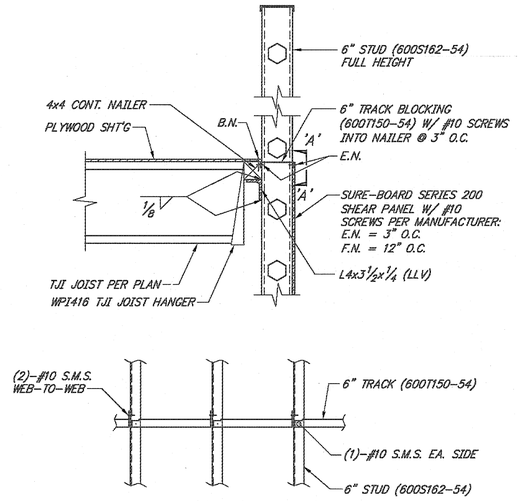


SECTION 'A-A'

DETAIL 1" 2

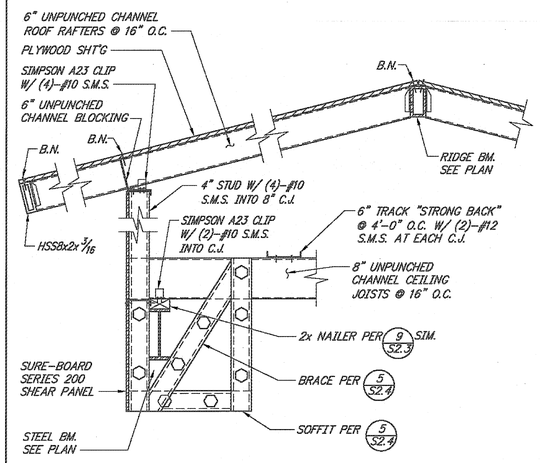


SECTION 1" 3

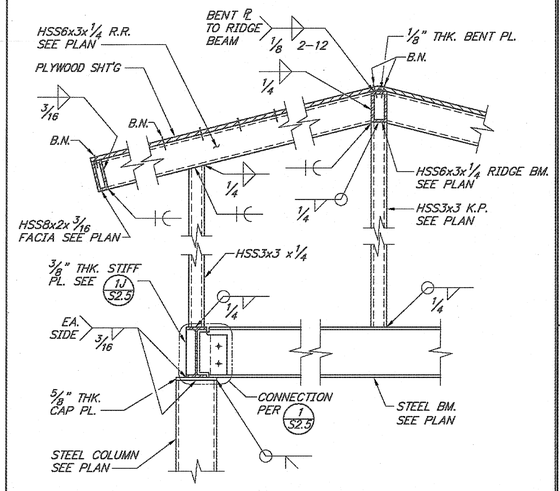


SECTION 1" 4

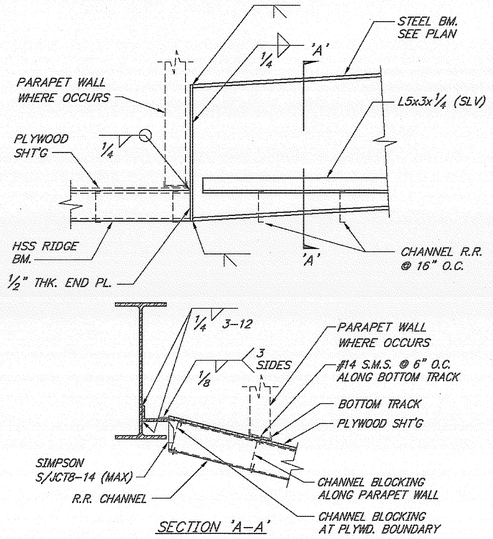


SECTION 'A-A'

DETAIL 1" 5

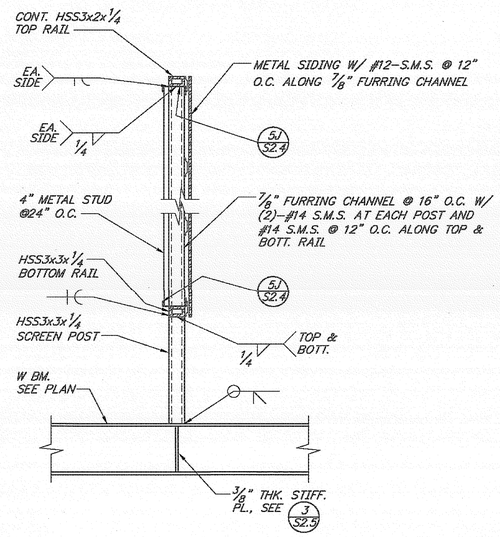


DETAIL 1" 6

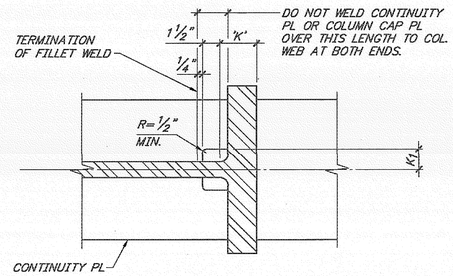


TYP. CONTINUITY PL. WELDING DETAIL NONE 7

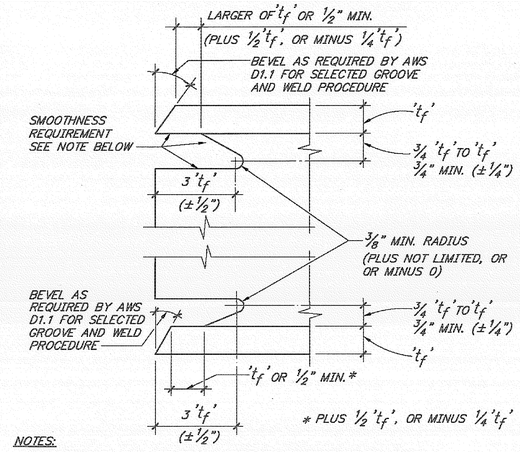


NOTES:

1. ACCESS HOLE SHALL BE GROUND SMOOTH TO SURFACE ROUGHNESS VALUE NOT TO EXCEED 500 MICROINCHES AND SHALL BE FREE OF NOTCHES AND GOUGES. A NOTCH & GOUGE IS ANY DEPRESSION DEEPER THAN THE OVERALL SURFACE ROUGHNESS. THE WELD ACCESS HOLE SHALL BE INSPECTED USING MAGNETIC PARTICLE TESTING OR LIQUID PENETRANT TESTING. ANGLE OF ACCESS HOLE CUT TO THE FLANGE SURFACE SHALL NOT EXCEED 25°

TYPICAL WELD ACCESS HOLE NONE 8

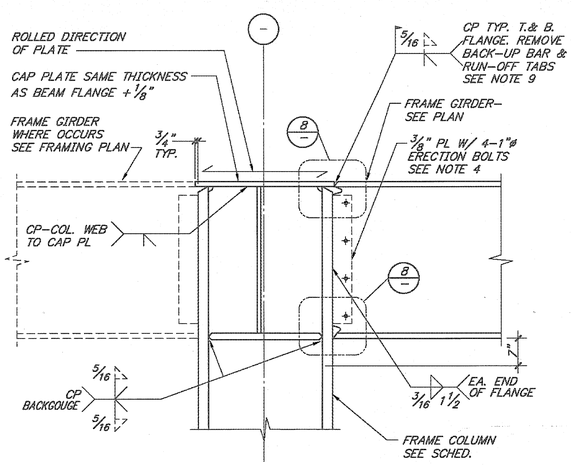


NOTES:

1. ALL CP & FILLET WELDS SHALL BE MADE WITH E71-T8 WITH SPECIFIED CVN=20 FT-LBS AT -20° F AND 40 FT-LBS AT 70° F.
2. ALL CONNECTION PLATES INCLUDING CONTINUITY, DOUBLER PLATES & COL. CAP PL SHALL BE A572 GRADE 50.
3. NO WELDING OF CONTINUITY PL TO COLUMN WEB IN THE "K ZONE" AREA (K+1 1/2") WILL BE PERMITTED, SEE DETAIL 7/- U.N.O.
4. ERECTION PL MAY BE USED AS BACKING BAR FOR THE BEAM WEB TO COL. GROOVE WELD. FOLLOWING THE COMPLETION OF WELDING, THE TERMINATION OF THE GROOVE WELD AT THE TOP AND BOTTOM OF THE BEAM WEB SHALL BE GROUND TO A SMOOTH CONTOUR. REINFORCING FILLET WELDS SHALL BE PLACED ON EACH SIDE OF THE JOINT. ON THE ERECTION PL SIDE OF THE JOINT, A REINFORCING FILLET WELD EQUAL IN SIZE TO THE THICKNESS OF THE ERECTION PLATE SHALL BE USED. ON THE BEAM WEB SIDE OF THE JOINT, A 1/4" FILLET WELD SHALL BE USED AND EXTEND PLATE 1/8" OVERLAP WITH WELD ACCESS HOLE.
5. BACKING BARS & RUN-OFF TABS SHALL BE REMOVED FROM JOINTS AND THE ROOT PASS SHALL BE BACKGOUGED TO SOUND WELD METAL AND INSPECTED USING MAGNETIC PARTICLE TESTING. FOLLOWING THE MAGNETIC PARTICLE TESTING OF THE BACKGOUGED AREA, THE ROOT SHALL BE BACKWELDED WITH REINFORCING FILLET WELD OF 5/16". MAGNETIC PARTICLE TESTING SHALL BE REPEATED ON THE FILLET WELD AND THE IMMEDIATELY ADJACENT AREA OF THE FILLET WELD.
6. HEAVY SECTION COLUMN FLANGES (ASTM GROUP #3 SHAPES WITH FLANGES THICKER THAN 1 1/2", & ASTM A6 GROUP #4 AND GROUP #5 SHAPES) SHALL BE ULTRASONICALLY EXAMINED, PRIOR TO WELDING, FOR EVIDENCE OF LAMINATIONS, INCLUSIONS OR OTHER DISCONTINUITIES. THE AREA TO BE TESTED IS A ZONE 3" ABOVE AND BELOW EACH FLANGE BEAM CONNECTIONS.
7. ERECTION PLATE LENGTH SHALL BE EQUAL TO THE DISTANCE BETWEEN ACCESS HOLES PLUS 1/4".

TYPICAL MOMENT FRAME CONECTION DETAIL NONE 10

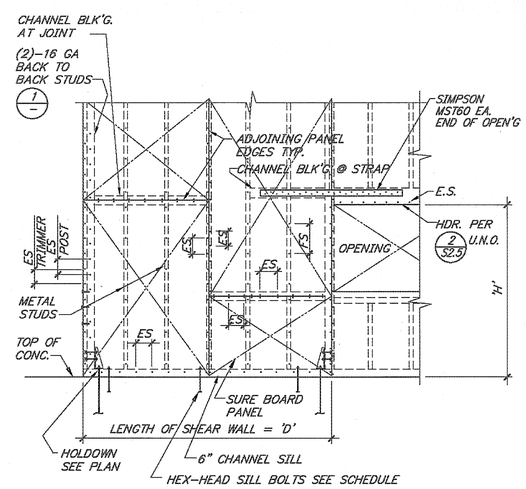


SURE BOARD SHEAR WALL SCHEDULE

| SHEAR WALL MARK | SHEATHING THICKNESS AND (TYPE) | NO. OF SIDES | SHEAR WALL FASTENING (1) SCREW SIZE AND SPACING EDGE SCREW E.S. | FIELD SCREW F.S. | SILL BOLTS | MAX. SHEAR (PLF) |
|---|---|---|---|---|---|---|
| | | | SIZE | | | |
| 1 | SURE BOARD SERIES 200 | 1 | #10 | 3 | 12 | 5/8"ø @ 12" O.C. | 1042 |
| | | | | | | |
| | | | | | | |

NOTE:

(1) SCREWS TO BE STAGGERED AT ADJOINING PANEL EDGES.
(2) PROVIDE CHANNEL BLK'G. @ ALL UNSUPPORTED SHEATHING JOINTS AND EDGES.
(3) PROVIDE 3/8" SCREWING EDGE DIST.
(4) PROVIDE 1/2" MIN. SEPARATION BETWEEN THE STRUCT. SHEATHING & CONCRETE.
(5) MINIMUM PANEL DIMENSION IS 1'-4". USE FULL SIZE PANELS WHERE POSSIBLE.
(6) OVER DRIVEN SCREWS INTO SHEATHING IS NOT ACCEPTABLE. ANY SHEATHING WITH OVER DRIVEN SCREWS SHALL BE REPLACED AT CONTRACTORS EXPENSE.
(7) ALL STRAPS TO BE PLACED OVER TOP OF SHEATHING.
(8) PROVIDE HOLDOWN FOR ALL THE MARKED SHEAR WALL AS NOTED ON PLANS. SEE DET. 1/S2.6 FOR INFO.
(9) PROVIDE STRAP AT TOP OF OPENING WHERE 'D' IS LESS THAN 1/2 H.
(10) ALL SCREWS MUST BE SELF-DRILLING 3/4" LONG DRILL-IN BUGLE HEAD SCREWS HAVING A MINIMUM #6 SHANK DIAMETER, MINIMUM 0.3145" HEAD DIAMETER AND 1 1/4" LONG.
(11) SCREW FASTENER HEAD MUST BE FLUSH WITH THE PANEL SURFACE AND PENETRATE INTO THE COLD FORMED STEEL FRAMING MEMBER A MINIMUM OF THREE EXPOSED THREADS.

TYPICAL SHEAR WALL SCHEDULE NONE 11


MIG
MOORE IACOFANO GOLTSMAN, INC.
501 N. HARBOR BLVD. FULLERTON, CA 92831
TEL 714/871-3553 FAX 714/871-1169
www.migcom.com

PITASSI ARCHITECTS INC.
8439 White Oak Ave., Suite. 105
Rancho Cucamonga, Ca 91730
Tel. 909-980-1361 ▪ Fax. 909-944-5814
e-mail. pjpaia@pitassiarchitects.com

CONSULTANT:
TMAD TAYLOR & GAINES
▪ STRUCTURAL ▪ MECHANICAL ▪ ELECTRICAL ▪ CIVIL
800 North Ferrari Lane, Suite 100
Ontario, California 91764
Phone: 909.477.6915 Fax: 909.477.6919
www.tmadtg.com Project No. 4008.056.00


# PERRIS VALLEY Big League Dreams

2155 Trumble Road
Perris, California 92570

SHEET TITLE

100% CONSTRUCTION DOCUMENT

| DATE | REVISIONS |
|---|---|
| | |

STAMP

REGISTERED PROFESSIONAL ENGINEER TORY C. TSANG No.S2992 Exp. 06/30/2010 STRUCTURAL STATE OF CALIFORNIA

| CHECKED BY | DATE |
|---|---|
| SY | . |
| DATE 01-07-10 | FILE NAME |
| DRAWN BY DG | SHEET S-2.6 |
| JOB NO. 05208.00 | OF SHEETS |
| SCALE NOTED | |