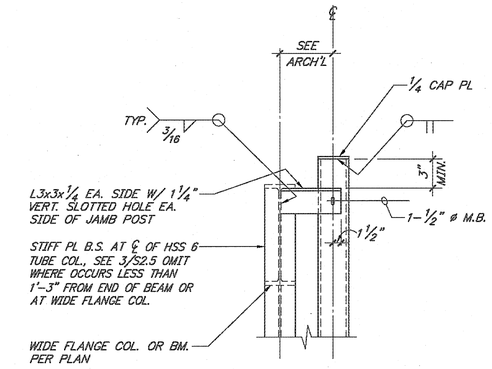


TYP. JAMB POST CONNECTION | NONE | 1

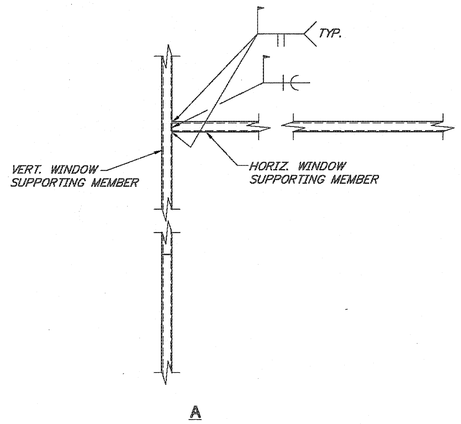


DETAIL | NONE | 2

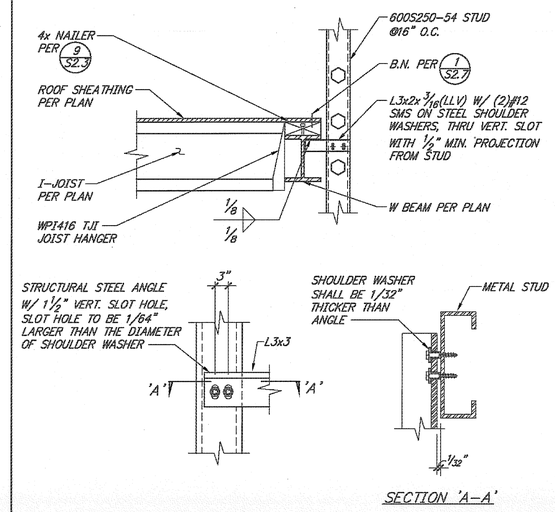


DETAIL | NONE | 3

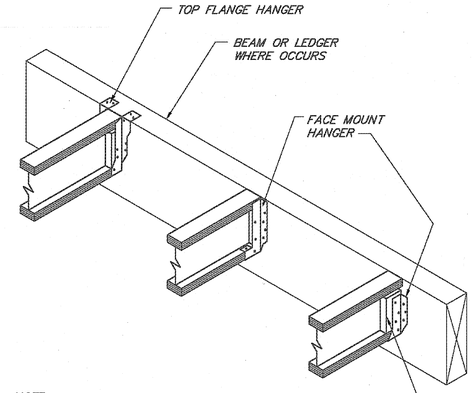


NOTE:
WEB STIFFENERS ARE REQD. IF THE SIDES OF THE HANGER DO NOT LATERALLY SUPPORT THE TJI JOIST TOP FLANGE

TYPICAL TJI HANGER DETAIL | NONE | 4


MIG
MOORE IACOFANO GOLTSMAN, INC.
501 N. HARBOR BLVD. FULLERTON, CA 92831
TEL 714/871-3539 FAX 714/871-1169
www.migcom.com

PITASSI ARCHITECTS, INC.
8439 White Oak Ave., Suite. 105
Rancho Cucamonga, Ca 91730
Tel. 909-980-1361 ▪ Fax. 909-944-5814
e-mail. pjpaia@pitassiarchitects.com

CONSULTANT:
TMAD TAYLOR & GAINES
▪ STRUCTURAL ▪ MECHANICAL ▪ ELECTRICAL ▪ CIVIL
800 North Ferrari Lane, Suite 100
Ontario, California 91764
Phone: 909.477.6915 Fax: 909.477.6919
www.tmadtg.com Project No. 4008.056.00


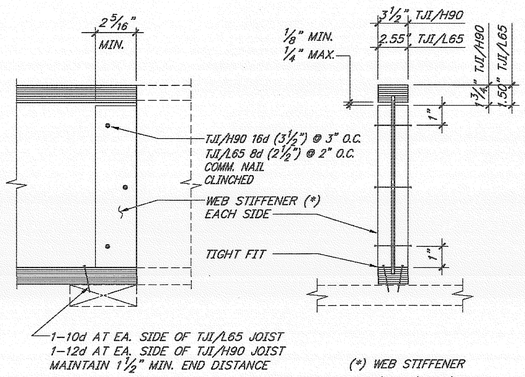


NOTES:
1. WEB STIFFENER MATERIAL SHALL BE SHEATHING MEETING THE REQUIREMENTS OF PS1 OR PS2 WITH FACE GRAIN PARALLEL TO LONG AXIS.
2. 2x4 CONSTRUCTION GRADE OR BETTER.

TYPICAL WEB STIFFENER DETAIL | NONE | 5

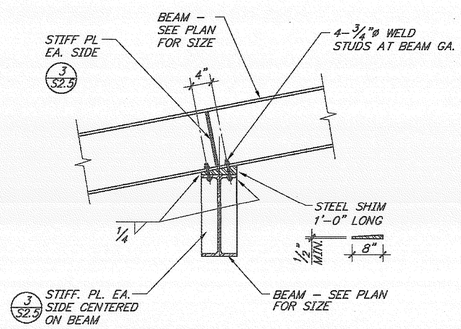


STEEL BEAM CONNECTION/SLOPE | NONE | 6

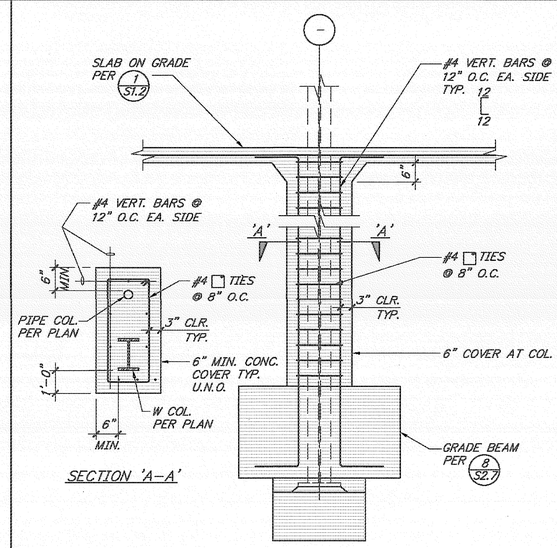


DETAIL & SECTION | NONE | 7

NOTES:
1. MAXIMUM CAPACITY FOR OVERHANG CASEWORK =300#/FT. APPLIED MAXIMUM 9" FROM FACE OF STUD. THIS CAPACITY IS BASED ON MINIMUM OF TWO BACKINGS (ONE AT TOP ONE AT BOTTOM OF CASEWORK). CASE WORK CONNECTION SPACING SHALL NOT EXCEED 16".
2. CASEWORK LOADS ARE BASED ON 50 PCF
3. SPECIAL DESIGN MUST BE PROVIDED FOR THE ENGINEER OF RECORD TO REVIEW IF THE CASEWORK OR ANY EQUIPMENT HANGING ON THE WALL WEIGHS MORE THAN MAXIMUM CAPACITY AS SHOWN ABOVE.
4. AT FLOOR MOUNTED CABINETS, SPACE CONT. BACKING AT 6"± FROM TOP OF CABINETS.
5. PROVIDE MIN. ANCHORAGE ATTACHMENT OF CABINET W/ SHEET METAL SCREWS PER ARCH.

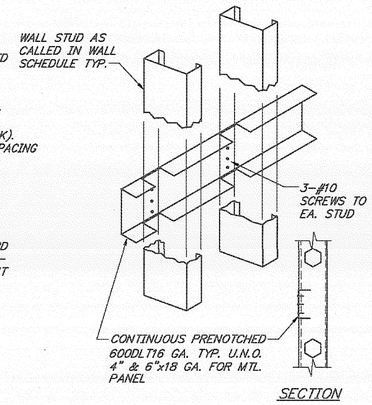


STUD BACKING DETAIL | NONE | 8

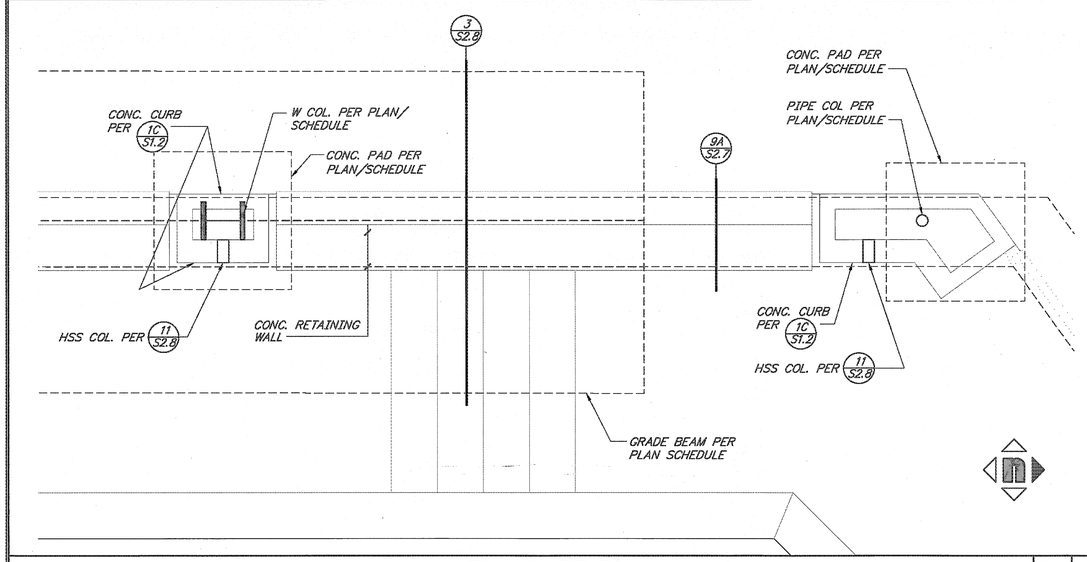


ENLARGED PLAN | 3/4" | 9

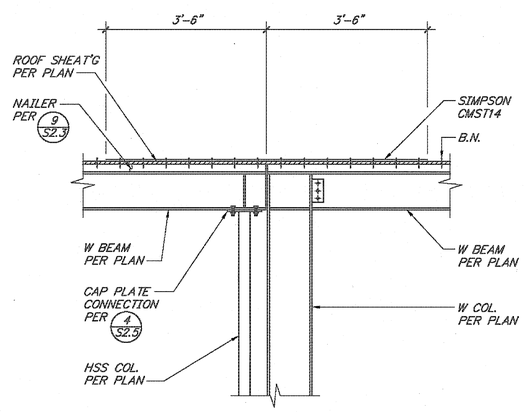


DRAG CONNECTION | NONE | 10

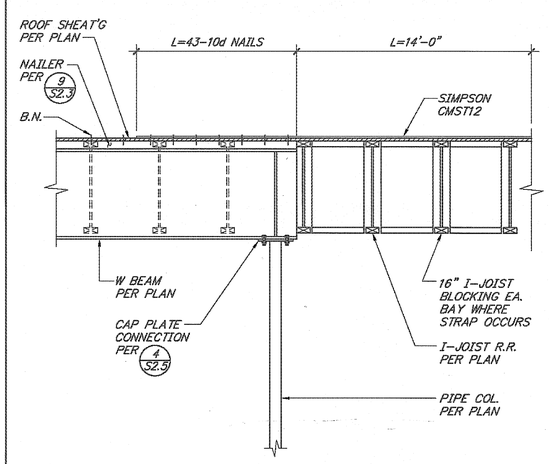


DRAG CONNECTION | NONE | 11

# PERRIS VALLEY Big League Dreams

2155 Trumble Road
Perris, California 92570

SHEET TITLE

100% CONSTRUCTION DOCUMENT

| DATE | REVISIONS |
|---|---|
| | |

STAMP

REGISTERED PROFESSIONAL ENGINEER SERV C. TSANG No. S2892 Exp. 06/30/2010 STRUCTURAL STATE OF CALIFORNIA

| CHECKED BY | DATE |
|---|---|
| SY | . |

| | |
|---|---|
| DATE 01-07-10 | FILE NAME |
| DRAWN BY DG | SHEET S-2.9 |
| JOB NO. 05208.00 | OF SHEETS |
| SCALE NOTED | |