| OPENING SIZE | LINTEL DEPTH (WIDTH TO MATCH STUD) | NUMBER | |
|---|---|---|---|
| | | FULL HT. STUDS | TRIMMER |
| TO: 3'-0" | 6" | 2 | 1 |
| 7'-0" | 8" | 3 | 1 |
| 10'-9" | 12" | 3 | 2 |
| 12'-0" TO 15'-0" | 14" | 3 | 2 |

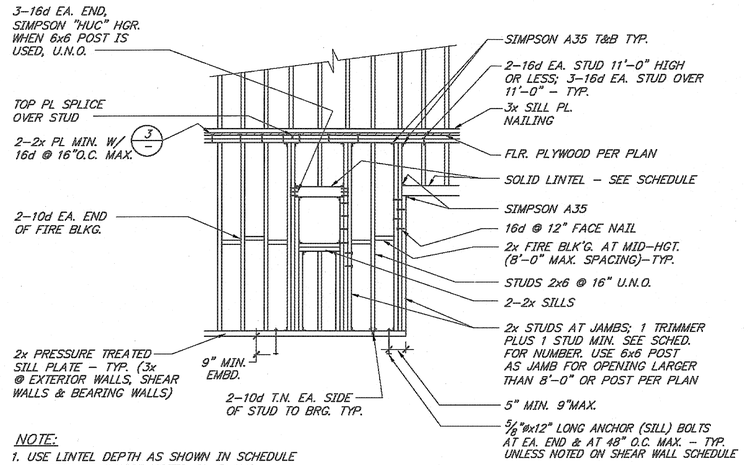


NOTE:
1. USE LINTEL DEPTH AS SHOWN IN SCHEDULE UNLESS OTHERWISE NOTED ON PLANS
2. PROVIDE DRYPACK WHEN CONC. IS NOT LEVEL.

## TYPICAL STRUCTURAL WALL FRAMING DETAILS — NONE — 1

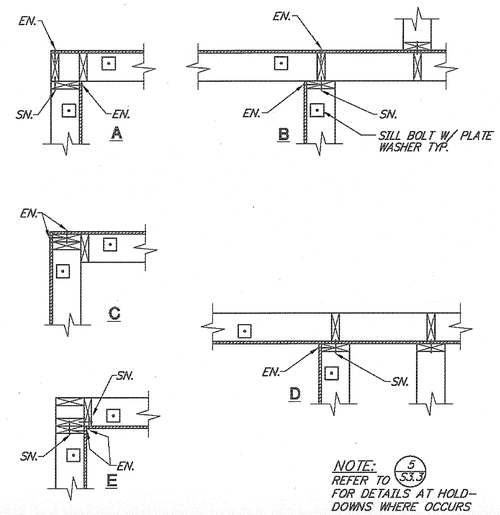


NOTE:
REFER TO 5/S3.3 FOR DETAILS AT HOLD-DOWNS WHERE OCCURS

## TYPICAL WALL INTERSECTION DETAILS — NONE — 2

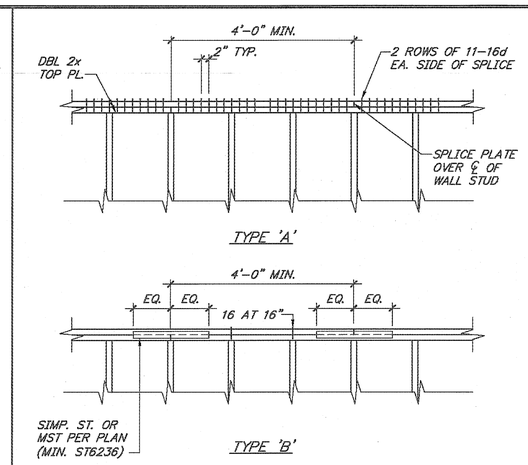


NOTE:
1. TYPICAL DO NOT COUNTERSINK BOLT

## TYPICAL TOP PLATE SPLICE DETAIL — NONE — 3


MOORE IACOFANO GOLTSMAN, INC.
801 N. HARBOR BLVD. FULLERTON, CA 92831
TEL 714/871-3539 FAX 714/871-1189
www.migsam.com

PITASSI ARCHITECTS, INC.
8439 White Oak Ave., Suite 105
Rancho Cucamonga, Ca 91730
Tel. 909-980-1361 ▪ Fax. 909-944-5814
e-mail. pjpala@pitassiarchitects.com

CONSULTANT:
TMAD TAYLOR & GAINES
▪ STRUCTURAL ▪ MECHANICAL ▪ ELECTRICAL ▪ CIVIL
800 North Ferrari Lane, Suite 100
Ontario, California 91764
Phone: 909.477.6915 Fax: 909.477.6919
www.tmadtg.com Project No. 4008.056.00


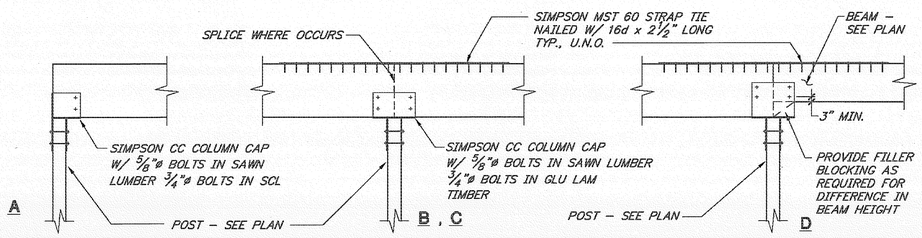


NOTE:
AT DETAIL "1C" USE CONT. BEAM & OMIT STRAP

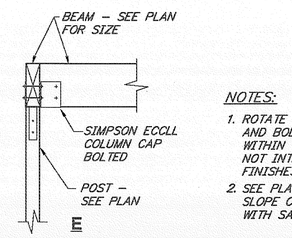


NOTES:
1. ROTATE SIMPSON CC STRAPS AND BOLT HEADS TO BE LOCATED WITHIN THE WALL FRAMING SO NOT INTERFERE WITH ARCHITECTURAL FINISHES.
2. SEE PLAN FOR BEAM SLOPE - SLOPE COLUMN CAP WITH SAME SLOPE.

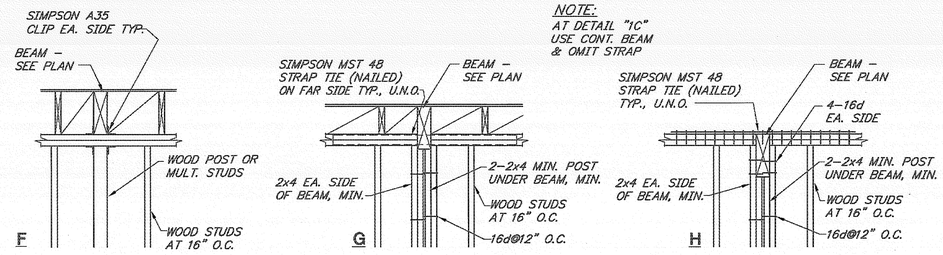


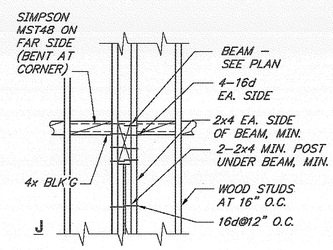


## TYPICAL WOOD BEAM FRAMING DETAILS — NONE — 4

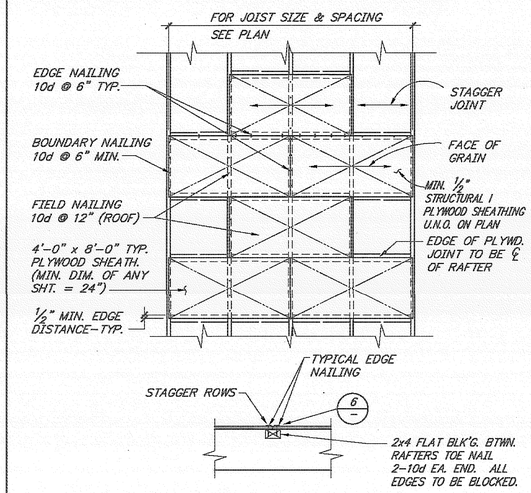


## TYP. PLYWOOD ROOF SHEATHING DETAIL — NONE — 5

PERRIS VALLEY Big League Dreams

2155 Trumble Road
Perris, California 92570

SHEET TITLE

100% CONSTRUCTION DOCUMENT

| DATE | REVISIONS |
|---|---|
| | |

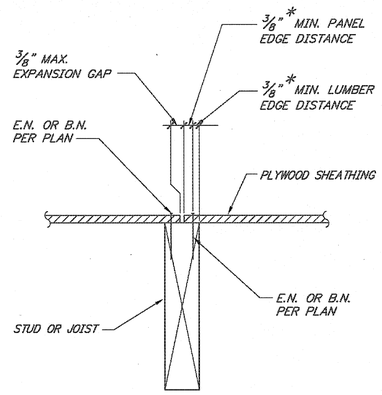


* 1/2" FOR 3x OR LARGER FRAMING MEMBER.

## TYP. PLYWOOD NAILING DETAIL — NONE — 6

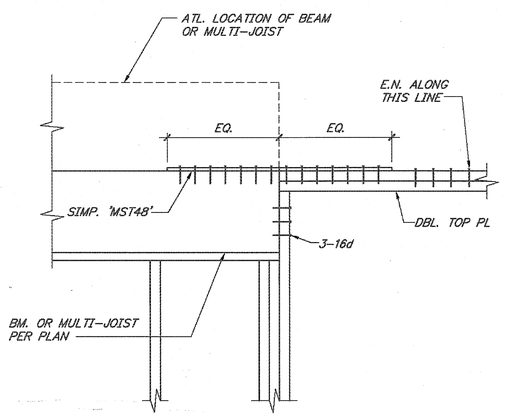


## TOP PLATE CONNECTION DETAIL — NONE — 7

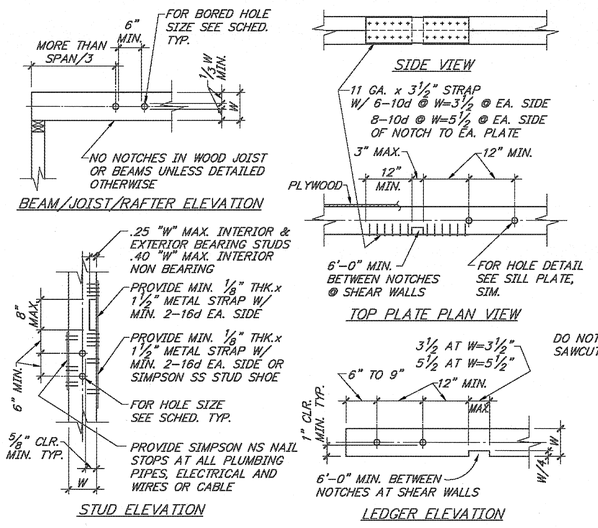


NOTES:
1. "W" DENOTES WIDTH OF WOOD MEMBER.
2. SILL PLATE NOTES:
   A) WHERE NOTCH IS GREATER THAN NOTED AT SILL PLATE PROVIDE ADDITIONAL A.B. (OR PROVIDE SAME DIAMETER W/ SILL BOLT W/ 7" LONG HILTI KB3) AT EA. SIDE OF NOTCH.
   B) WHERE BOLT IS LESS THAN 1" CLEAR FROM EDGE, PROVIDE ADDITIONAL A.B. OR HILTI KB3 (4" EMBED. MIN.) IN SILL PLATE.
   C) ALL OVERSIZED BOLT HOLES SHALL BE DRYPACKED.
3. TOP PLATE AND STUD NOTES:
   A) WHERE NOTCH OR DRILLED HOLE SIZE EXCEEDS ALLOWABLE: TOP PL - PROVIDE REINF. AS PER DETAIL STUDS - REPLACE STUD.
   B) WHERE BOLT IS LESS THAN 5/8" CLEAR OF MEMBER EDGE, REINFORCE AS PER GENERAL NOTES.
4. ALL HOLES ARE TO BE DRILLED.
5. PRE-DRILL CORNERS OF NOTCHES.
6. NOTCH TO BE ON OPPOSITE SIDE OF TOP PLATE AND SILL PL FROM PLYWOOD.

| DRILLED HOLE SCHEDULE | |
|---|---|
| MEMBER | MAX. HOLE DIAMETER |
| JOIST RAFTER BEAM LEDGER | W/8 |
| DBL.TOP PL SILL PL STUD | W/3 |

## TYPICAL NOTCH AND BORED HOLES IN STRUCTURAL MEMBERS DETAIL — NONE — 8

STAMP: REGISTERED PROFESSIONAL ENGINEER TONY C. TSANG No. S2992 Exp. 06/30/2010 STRUCTURAL STATE OF CALIFORNIA

| CHECKED BY | DATE |
|---|---|
| SY | . |
| DATE 01-07-10 | FILE NAME |
| DRAWN BY DG | SHEET S-3.4 |
| JOB NO. 05208.00 | |
| SCALE NOTED | OF SHEETS |