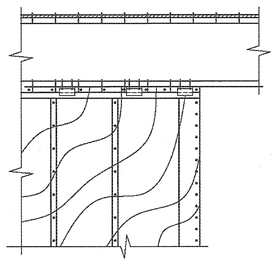

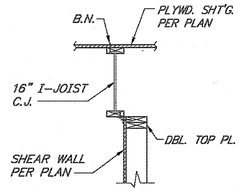


SECTION 'A-A'

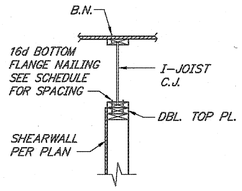


SECTION 'A-A' (ALT.)

| ANCHOR SCHEDULE | | |
|---|---|---|
| SHEAR WALL MARK | A35 SPACING | 16d NAIL SPACING |
| 1 & 3 | 14" O.C. | 2 @ 16" O.C. |
| 2 & 6 | 10" O.C. | 2 @ 4" O.C. |
| 4 | 8" O.C. | 2 @ 4" O.C. |
| 5 & 7 | 6" O.C. | 2 @ 3" O.C. |

ANCHOR SCHEDULE DETAIL 3/4" 1

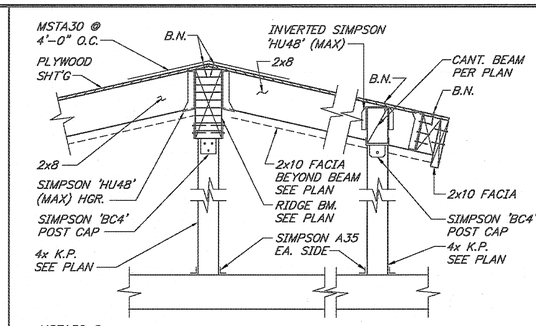


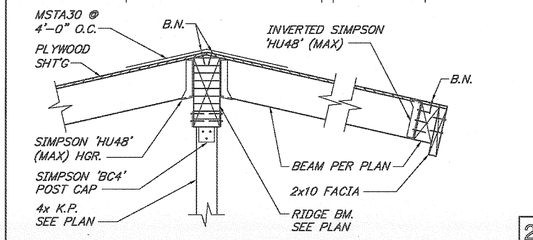


2A

DETAIL NONE 2

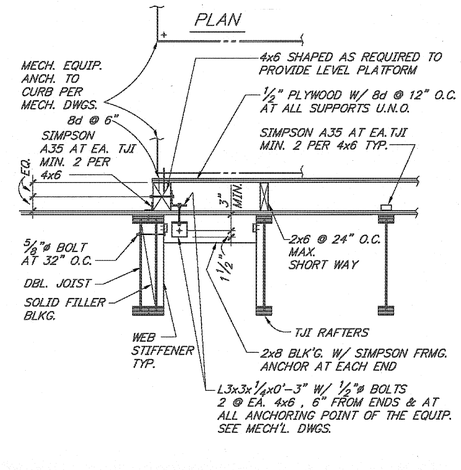


MECHANICAL EQUIPMENT PLATFORM NONE 3

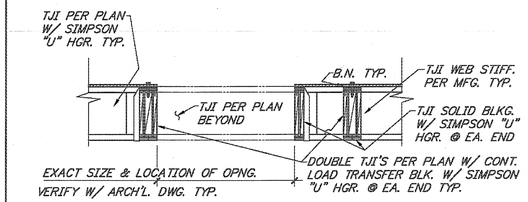


A

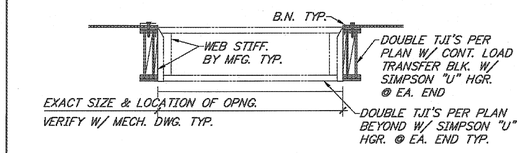


B

NOTE:
1. FOR TJI BLOCKING SEE (6/—)

TYPICAL OPENING FOR TJI JOIST NONE 4


MIG
MOORE IACOFANO GOLTSMAN, INC.
501 N. HARBOR BLVD. FULLERTON, CA 92831
TEL 714/871-3538 FAX 714/871-1169
www.migsam.com

PITASSI ARCHITECTS, INC.
8439 White Oak Ave., Suite 105
Rancho Cucamonga, Ca 91730
Tel. 909-980-1361 ▪ Fax. 909-944-5814
e-mail. pjpaia@pitassiarchitects.com

CONSULTANT:
TMAD TAYLOR & GAINES
▪ STRUCTURAL ▪ MECHANICAL ▪ ELECTRICAL ▪ CIVIL
800 North Ferrari Lane, Suite 100
Ontario, California 91764
Phone: 909.477.6915 Fax: 909.477.6919
www.tmadtg.com Project No. 4008.056.00


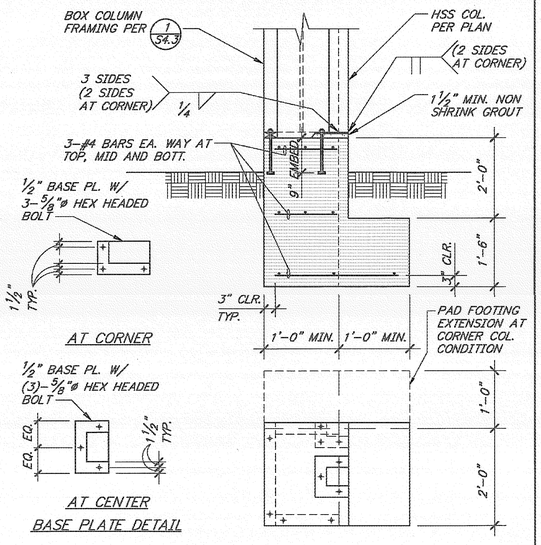


DETAIL NONE 5

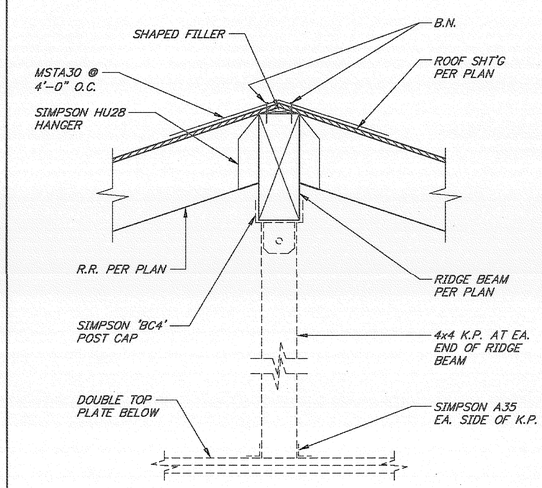


DETAIL NONE 6

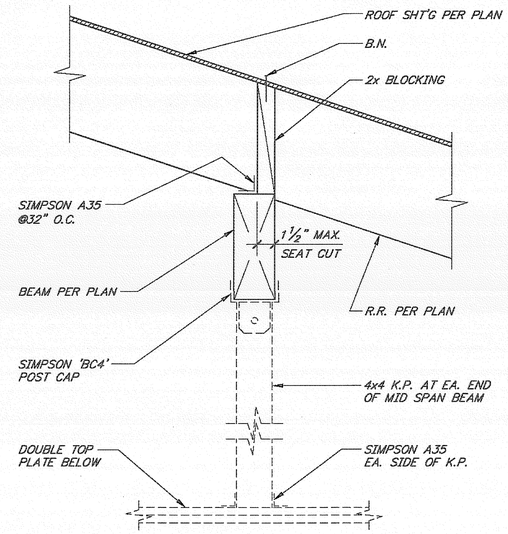


DETAIL NONE 7

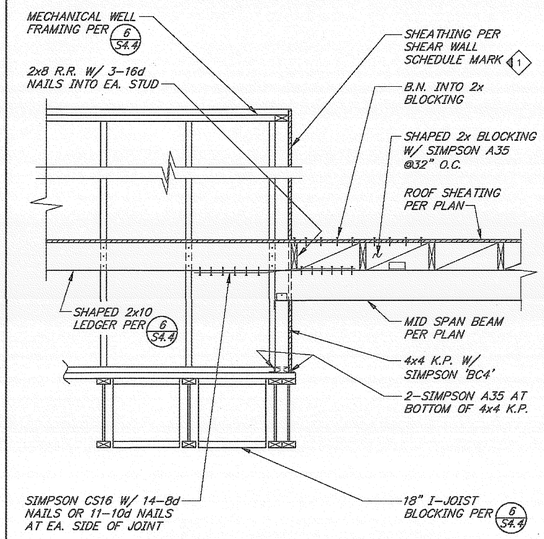


DETAIL NONE 8

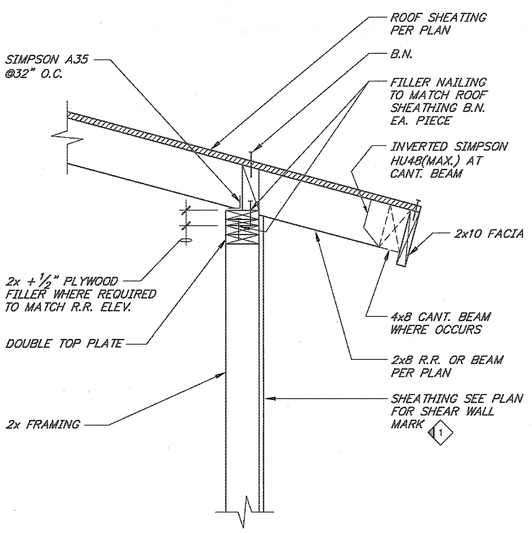


DETAIL NONE 9

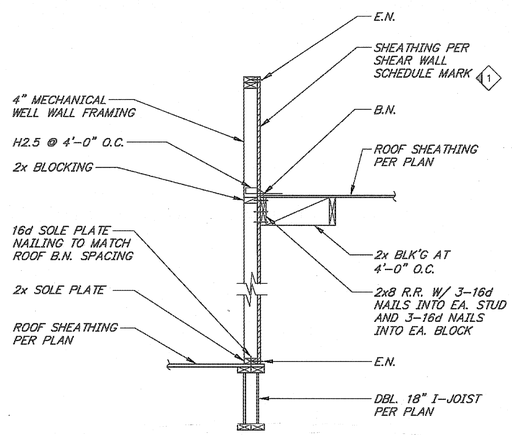


DETAIL NONE 10

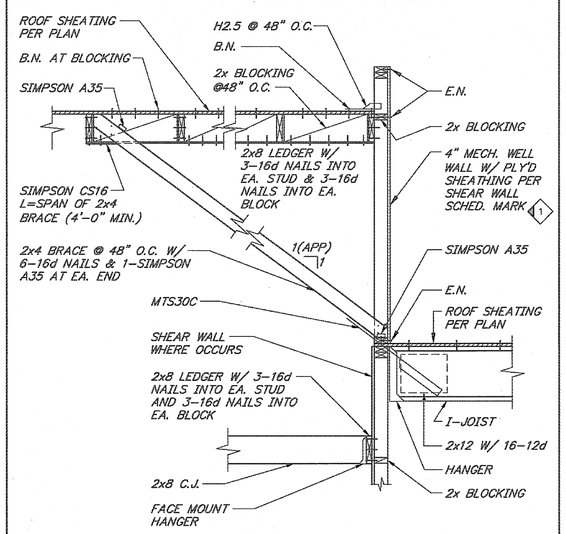


DETAIL NONE 11

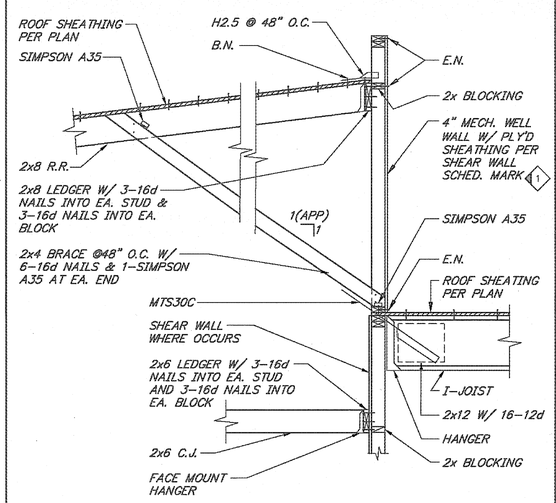


DETAIL NONE 12

# PERRIS VALLEY Big League Dreams

2155 Trumble Road
Perris, California 92570

SHEET TITLE

100% CONSTRUCTION DOCUMENT

| DATE | REVISIONS |
|---|---|
| | |

STAMP

REGISTERED PROFESSIONAL ENGINEER TONY C. TSANG No. S2992 Exp. 06/30/2010 STRUCTURAL STATE OF CALIFORNIA

| CHECKED BY | DATE |
|---|---|
| SY | . |
| DATE 01-07-10 | FILE NAME |
| DRAWN BY DG | SHEET S-4.5 |
| JOB NO. 05208.00 | OF SHEETS |
| SCALE NOTED | |