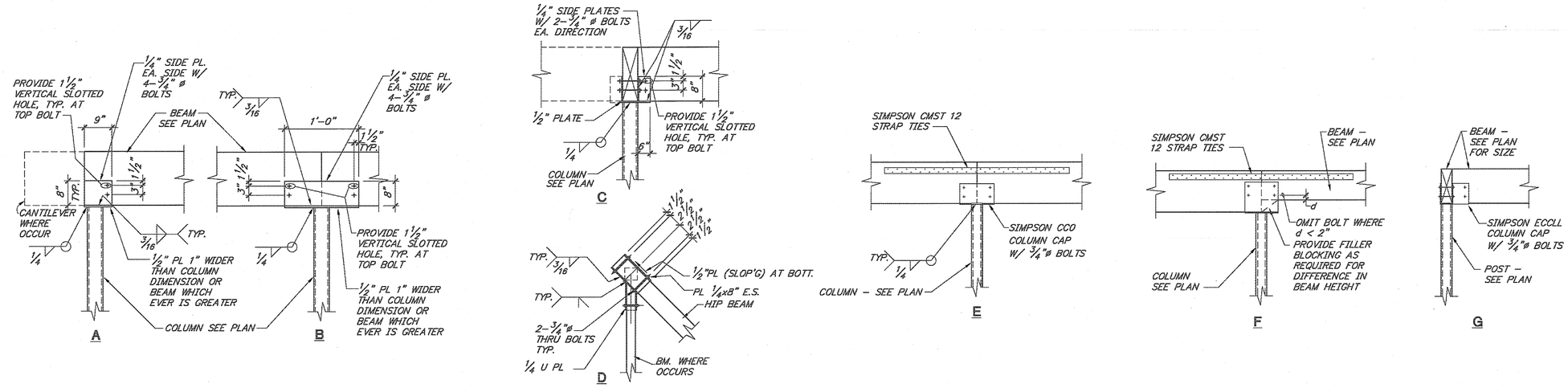


## BEAM TO HSS COLUMN SUPPORT

NONE | 1

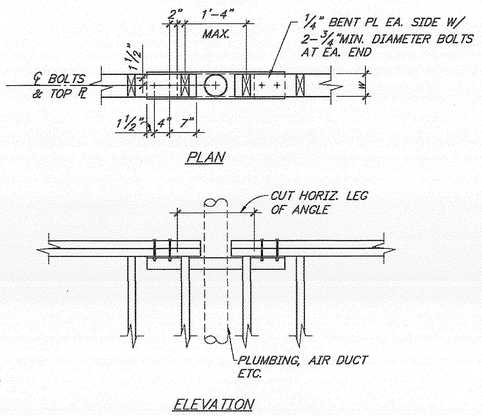


NOTES:
1. NO TOP PLATE SPLICE OCCUR WITHIN 6'-0" OF PIPE.
2. DETAIL APPLIES WHERE DRILLED HOLE EXCEEDS W/3 NOTCH EXCEEDS W/4 OR TOP PLATE IS INTERRUPTED.

## TYPICAL PIPES OR CONDUIT AT PLATES

NONE | 2

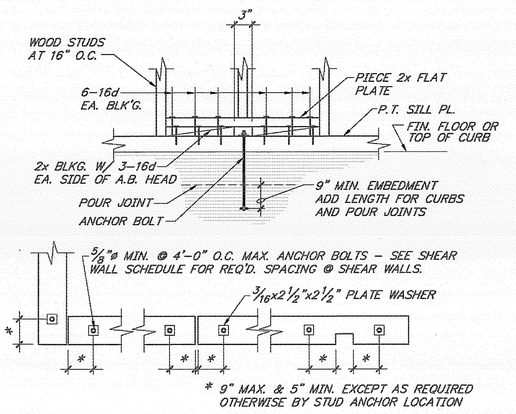


NOTES:
1. DO NOT COUNTER SINK ANCHOR BOLTS.
2. TREATED WOOD SILL PLATE WHERE CUT DRILLED OR NOTCHED SHALL BE TREATED WITH A PRESERVATIVE & APPROVED BY THE ENGINEER & THE ENFORCEMENT AGENCY ON ALL EXPOSED SURFACES FROM WHICH PRESERVATIVE HAS BEEN REMOVED.
3. USE SQUARE WASHERS AT ALL SILL PLATES.
4. SILL BOLTS, SEE GENERAL TIMBER NOTES. WHERE PLATE IS DRILLED OR NOTCHED MORE THAN 1/3 ITS WIDTH, SILL BOLTS SHALL BE PLACED 9" EACH SIDE OF CUT. PLATES LESS THAN 6" IN WIDTH SHALL NOT BE DRILLED OR NOTCHED UNLESS SO SHOWN ON DRAWINGS.
5. ALL OVERSIZED BOLT HOLES SHALL BE FILLED WITH EPOXY.
6. UPSET THREADS ON ANCHOR BOLTS ARE NOT ALLOWED.

## TYPICAL SILL BOLT DETAIL

NONE | 3

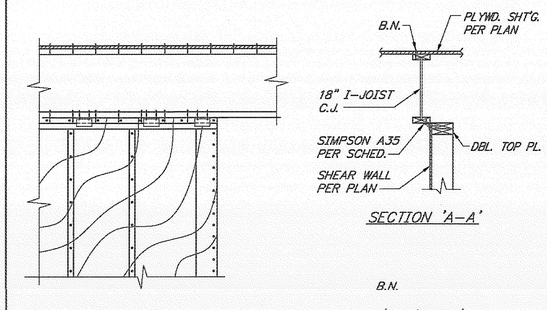


| ANCHOR SCHEDULE | | |
|---|---|---|
| SHEAR WALL MARK | A35 SPACING | 16d NAIL SPACING |
| 1 & 3 | 14" O.C. | 2 @ 16" O.C. |
| 2 & 6 | 10" O.C. | 2 @ 4" O.C. |
| 4 | 8" O.C. | 2 @ 4" O.C. |
| 5 & 7 | 6" O.C. | 2 @ 3" O.C. |

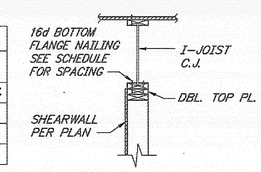


## ANCHOR SCHEDULE DETAIL

¾" | 4

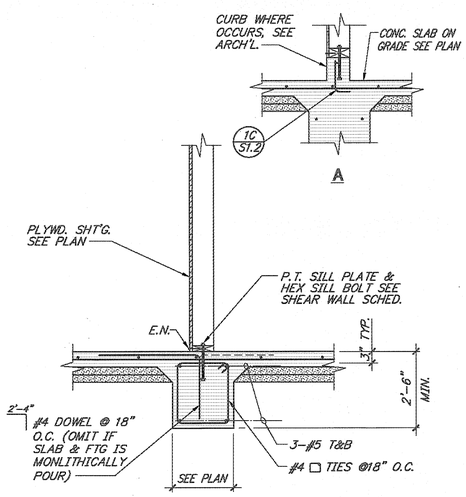


## INTERIOR FOOTING

¾" | 5

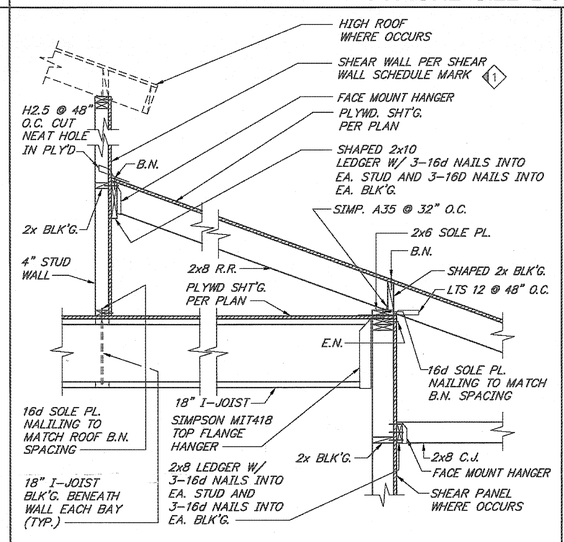


## SECTION

¾" | 6

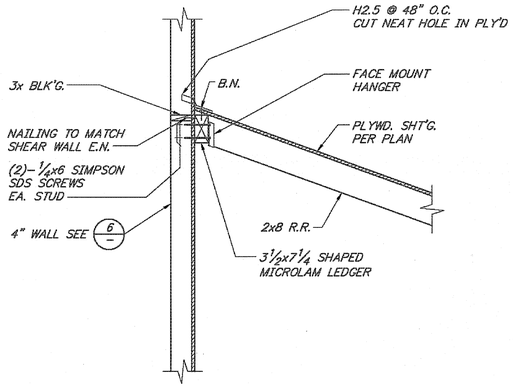


## SECTION

¾" | 7

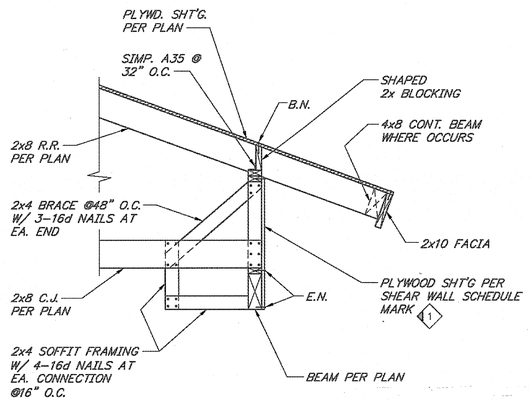


## SECTION

¾" | 8


MIG
MOORE IACOFANO GOLTSMAN, INC.
801 N. HARBOR BLVD. FULLERTON, CA 92831
TEL 714/871-3538 FAX 714/871-1169
www.migpcorp.com

PITASSI ARCHITECTS, INC.
8439 White Oak Ave., Suite. 105
Rancho Cucamonga, Ca 91730
Tel. 909-986-1361 ▪ Fax. 909-944-5814
e-mail. pjpaia@pitassiarchitects.com

CONSULTANT:
TMAD TAYLOR & GAINES
• STRUCTURAL • MECHANICAL • ELECTRICAL • CIVIL
800 North Ferrari Lane, Suite 100
Ontario, California 91764
Phone: 909.477.6915 Fax: 909.477.6919
www.tmadtg.com Project No. 4008.056.00


# PERRIS VALLEY Big League Dreams

2155 Trumble Road
Perris, California 92570

SHEET TITLE

100% CONSTRUCTION DOCUMENT

| DATE | REVISIONS |
|---|---|
| | |

STAMP

REGISTERED PROFESSIONAL ENGINEER SEORY C. TSANG No.52992 Exp. 06/30/2011 STRUCTURAL STATE OF CALIFORNIA

| CHECKED BY | DATE |
|---|---|
| SY | . |
| DATE 01-07-10 | FILE NAME |
| DRAWN BY DG | SHEET S-3.5 |
| JOB NO. 05208.00 | OF SHEETS |
| SCALE NOTED | |