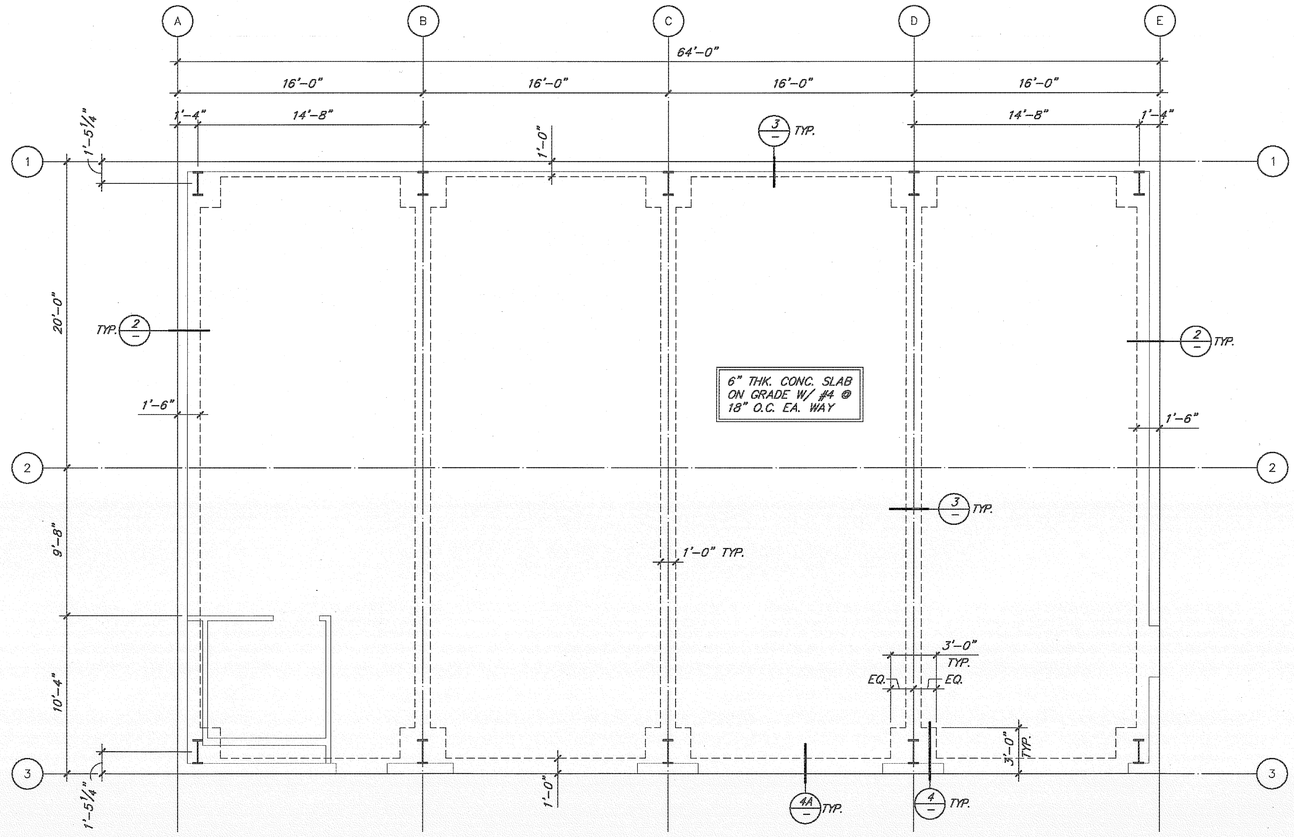


FOUNDATION NOTES:

1. REFER TO SHEETS S-1.0, AND S-1.1 FOR GENERAL NOTES.
2. REFER TO SHEETS S-1.2 THRU S-1.3 FOR TYPICAL DETAILS.
3. ALL DIMENSIONAL INFORMATION SHOWN IS BASED ON THE ARCHITECTURAL DRAWINGS. FOR ANY DIMENSIONAL INFORMATION NOT SHOWN REFER TO THE ARCHITECTURAL DRAWINGS.
4. ALL SLAB OPENINGS, EDGES, PADS, CURBS, FLOOR SLOPES, DRAINS, TRENCHES, STEPS, EXTERIOR PAVINGS AND DEPRESSIONS SHALL BE LOCATED AND COORDINATED PER THE ARCHITECTURAL AND CIVIL DRAWINGS.
5. FINISH FLOOR ELEVATION 0'-0"
6. SLAB DEPRESSION DEPTH BELOW FINISH FLOOR SEE 1/S1.2 -2"

MAINTENANCE BUILDING - FOUNDATION PLAN | ¼" | 1

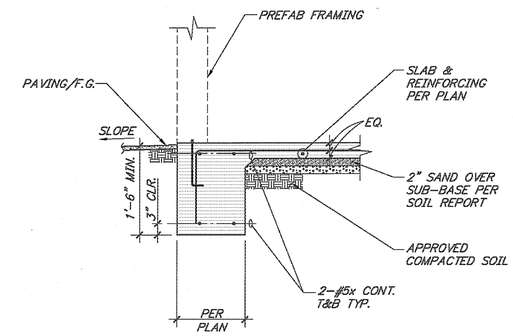


TYP. PERIMETER FOOTING | NONE | 2

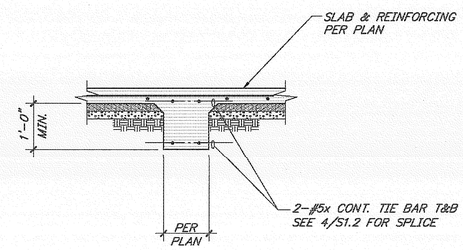


TYP. INTERIOR TIE BEAM | NONE | 3

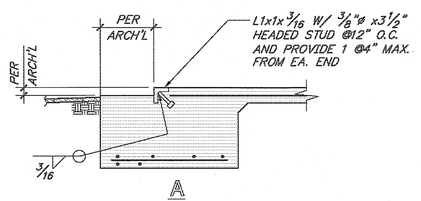


A

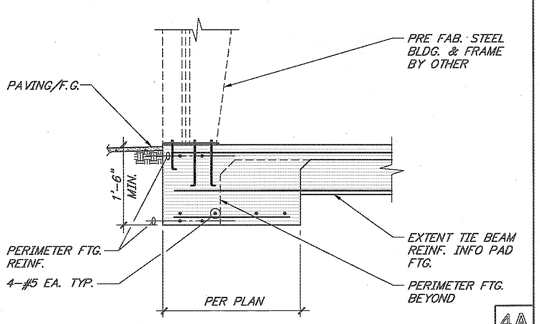


4A

TYP. PAD FOOTING | NONE | 4

NOT USED | - | 5

NOT USED | - | 6

NOT USED | - | 7


MIG
MOORE IACOFANO GOLTSMAN, INC.
801 N. HARBOR BLVD. FULLERTON, CA 92831
TEL 714/871-3628 FAX 714/871-1188
www.migcorp.com

PITASSI ARCHITECTS, INC.
8439 White Oak Ave., Suite. 105
Rancho Cucamonga, Ca 91730
Tel. 909-980-1361 ▪ Fax. 909-944-5814
e-mail. pjpala@pitassiarchitects.com

CONSULTANT:
TMAD TAYLOR & GAINES
• STRUCTURAL • MECHANICAL • ELECTRICAL • CIVIL
800 North Ferrari Lane, Suite 100
Ontario, California 91764
Phone: 909.477.6915 Fax: 909.477.6919
www.tmadtg.com Project No. 4008.056.00


# PERRIS VALLEY Big League Dreams

2155 Trumble Road
Perris, California 92570

SHEET TITLE

100% CONSTRUCTION DOCUMENT

| DATE | REVISIONS |
|---|---|
| | |

STAMP

REGISTERED PROFESSIONAL ENGINEER — TORI C. TSAMIS — No. S2992 — Exp. 06/30/2010 — STRUCTURAL — STATE OF CALIFORNIA

| CHECKED BY | DATE |
|---|---|
| SY | - |
| DATE 01-07-10 | FILE NAME |
| DRAWN BY DG | SHEET |
| JOB NO. 05208.00 | S-5.1 |
| SCALE NOTED | OF SHEETS |