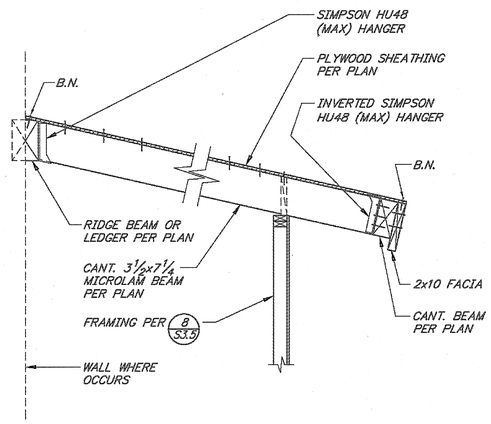


DETAIL NONE 1

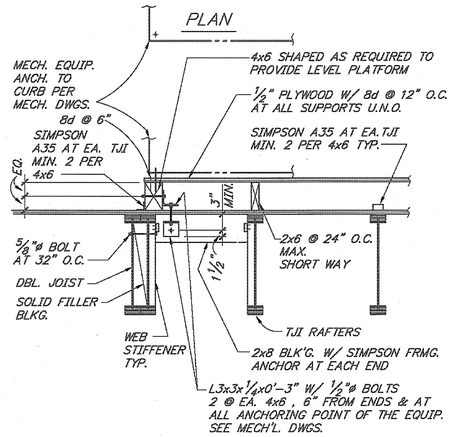


MECHANICAL EQUIPMENT PLATFORM NONE 2

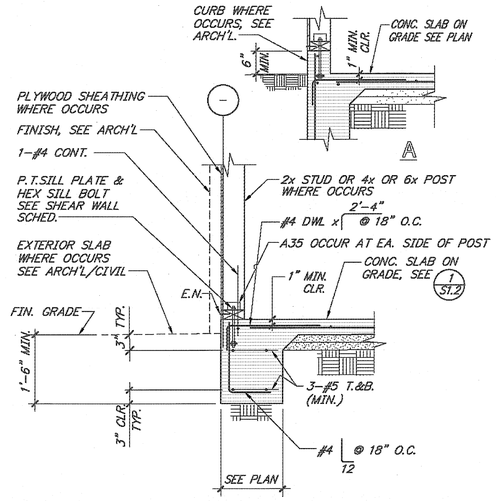


* POUR CURB MONOLITHICALLY WITH FOOTING, TYP.

TYPICAL PERIMETER FOOTING NONE 3

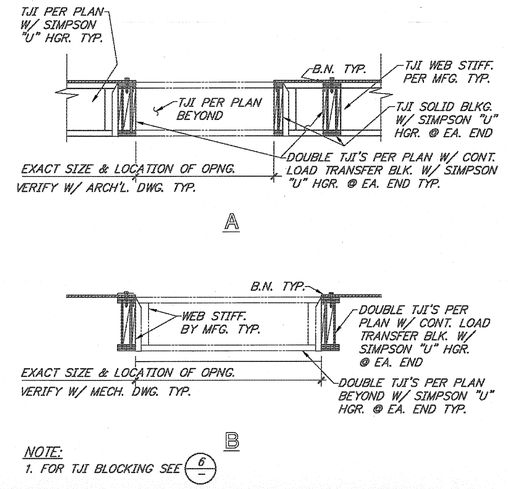


NOTE:
1. FOR TJI BLOCKING SEE 6/–

TYPICAL OPENING FOR TJI JOIST NONE 4

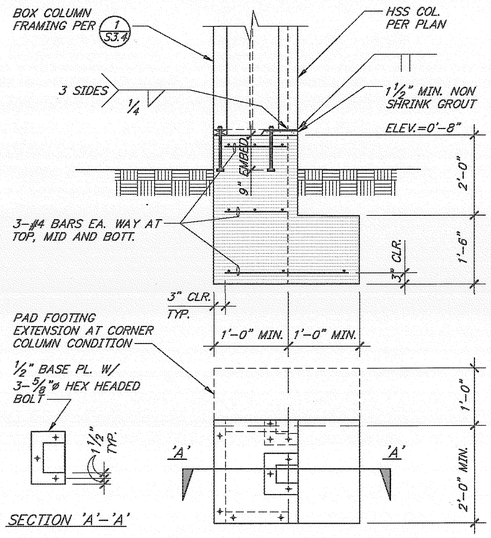


DETAIL NONE 5

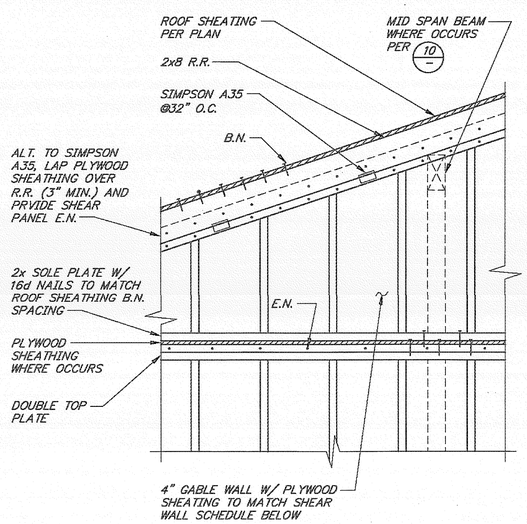


DETAIL NONE 6

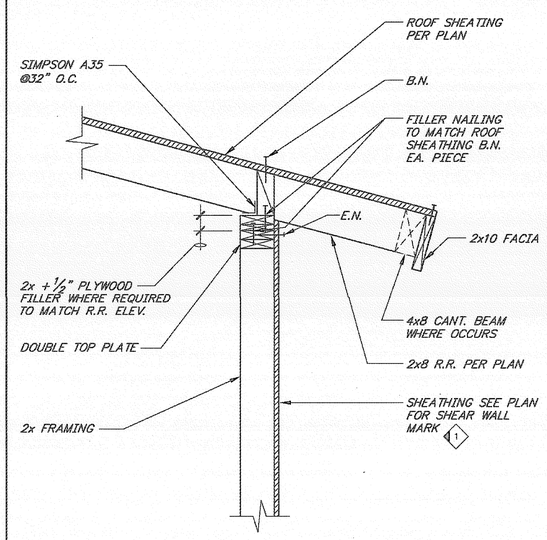


DETAIL NONE 7

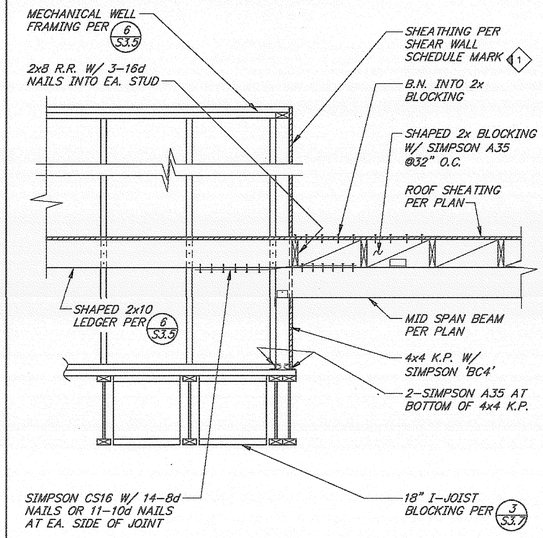


DETAIL NONE 8

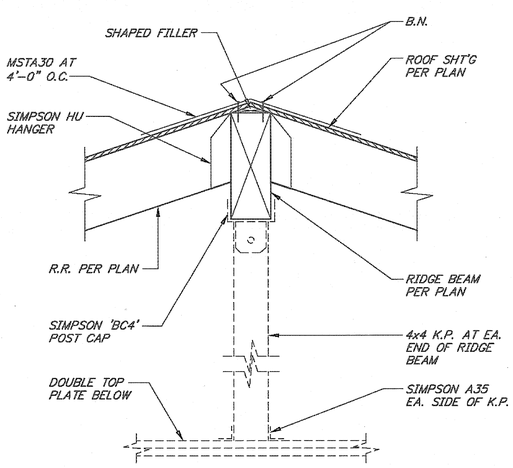


DETAIL NONE 9

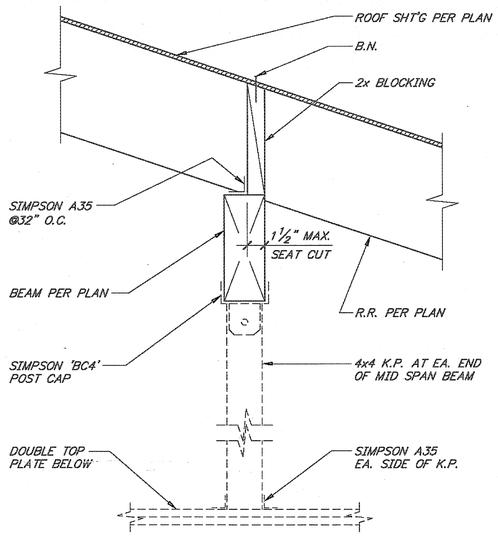


DETAIL NONE 10

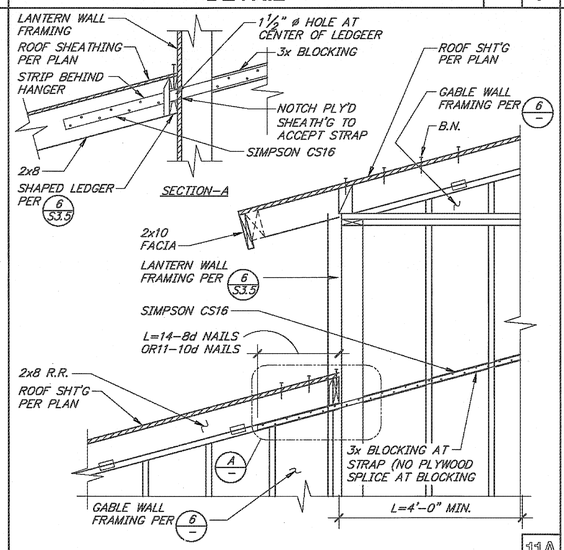


11A

DETAIL NONE 11

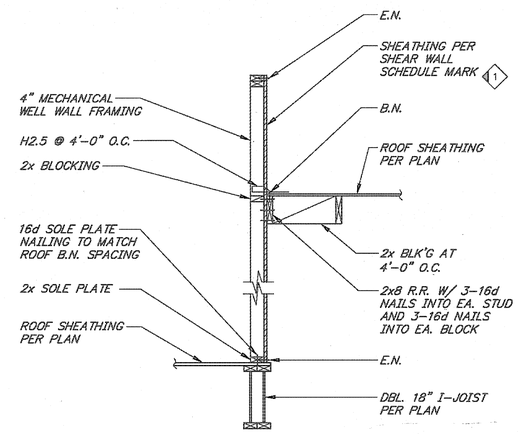


DETAIL NONE 12


MIG
MOORE IACOFANO GOLTSMAN, INC.
601 N. HARBOR BLVD. FULLERTON, CA 92831
TEL 714/871-3538 FAX 714/871-1189
www.migcorp.com

PITASSI ARCHITECTS, INC.
8439 White Oak Ave., Suite. 105
Rancho Cucamonga, Ca 91730
Tel. 909-980-1361 ▪ Fax. 909-944-5814
e-mail. pjpaia@pitassiarchitects.com

CONSULTANT:
TMAD TAYLOR & GAINES
▪ STRUCTURAL ▪ MECHANICAL ▪ ELECTRICAL ▪ CIVIL
800 North Ferrari Lane, Suite 100
Ontario, California 91764
Phone: 909.477.6915 Fax: 909.477.6919
www.tmadtg.com Project No. 4008.056.00


# PERRIS VALLEY Big League Dreams

2155 Trumble Road
Perris, California 92570

SHEET TITLE

100% CONSTRUCTION DOCUMENT

| DATE | REVISIONS |
|---|---|
| | |

STAMP

REGISTERED PROFESSIONAL ENGINEER
SCOTT C. TSUNG
No. S2992
Exp. 06/30/2010
STRUCTURAL
STATE OF CALIFORNIA

| CHECKED BY | DATE |
|---|---|
| SY | . |
| DATE 01-07-10 | FILE NAME |
| DRAWN BY DG | SHEET S-3.6 |
| JOB NO. 05208.00 | OF SHEETS |
| SCALE NOTED | |