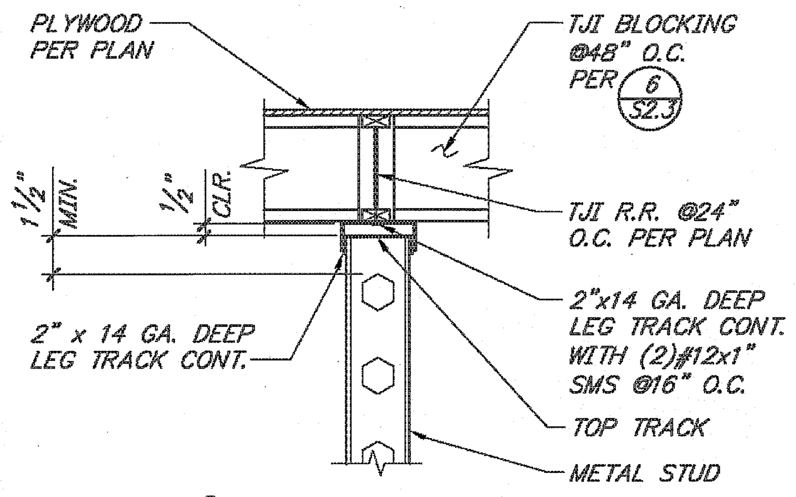

A TOP CONN. PARALLEL TO ROOF RAFTER

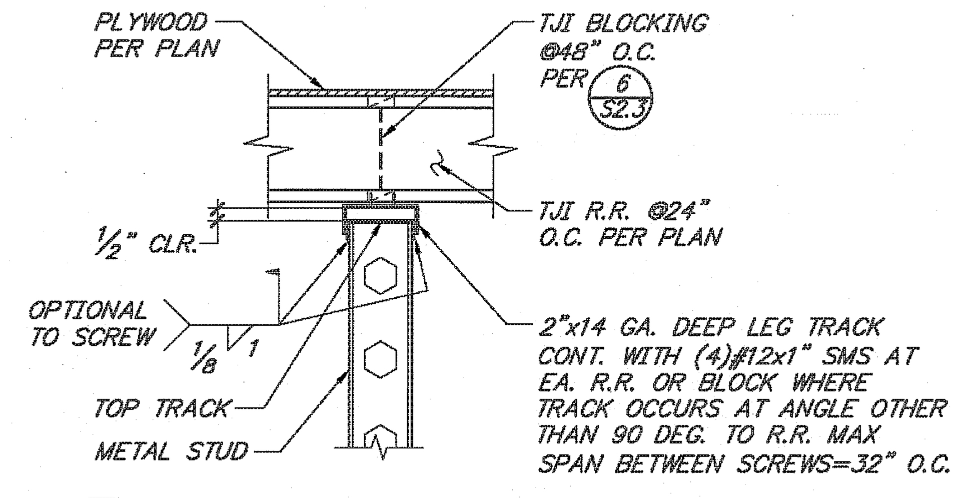

B TOP CONN. PERPENDICULAR TO ROOF RAFTER

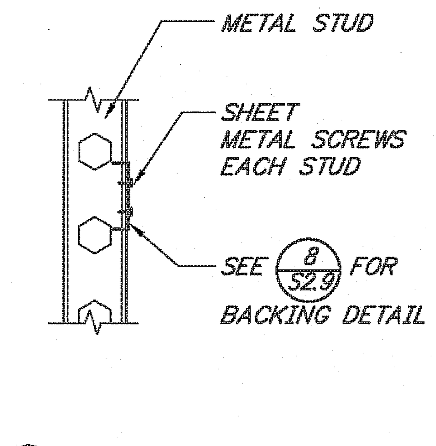

C TYP. BACKING CONN.

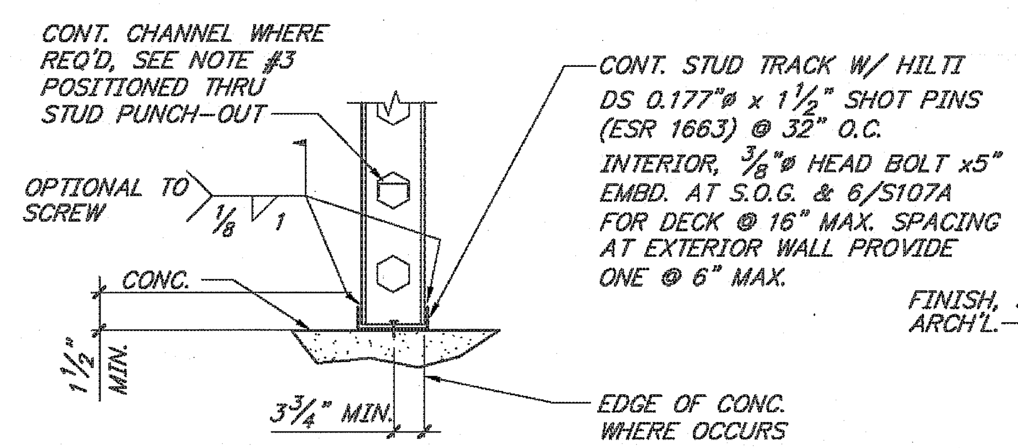

D TYPICAL BASE

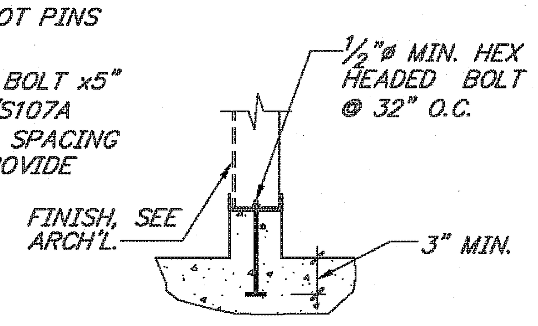

E AT CURB

NOTE: REFER TO ARCHITECTURAL DRAWINGS FOR STUD LAYOUT, SUSPENDED WALLS, SPECIAL SOFFITS AND WALL BRACING DETAILS.

METAL STUDS

1. METAL STUDS SHALL BE SSMA METAL SYSTEMS OR EQUAL, SEE GENERAL NOTES
2. ALL STUDS SHALL BE FORMED FROM STEEL THAT CORRESPONDS TO THE REQUIREMENTS OF ASTM A-570.
3. PROVIDE STUD WALL BRACING PER DETAIL 5/– AT ALL STEEL STUDS WITH WALL FINISH ON ONE SIDE ONLY.
4. SEE 3/S2.4 FOR SECTION PROPERTIES AND STUD SIZES.
5. BOLT HOLES IN TRACK SHALL BE 1/16" LARGER IN DIAMETER THAN NOMINAL SIZE OF BOLT SPECIFIED, UNLESS NOTED OTHERWISE
6. SEE DET. 5/S2.4 FOR MORE INFO.
7. SEE ARCH'L. FOR TOP TRACK OPTIONS.

TYPICAL STEEL STUD CONNECTION DETAILS — NONE 1

BRIDGING CHANNEL WELD-ATTACHED USING BRIDGE CLIP

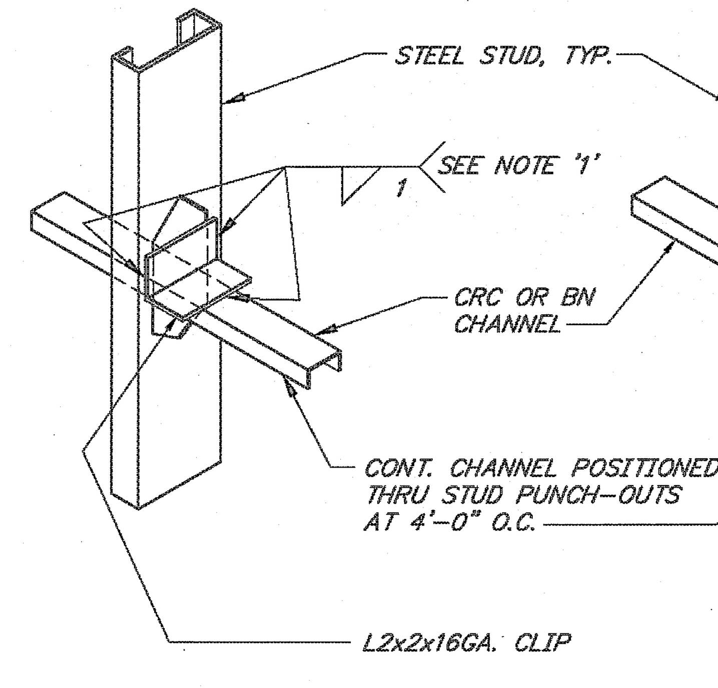

BRIDGING CHANNEL SCREW-ATTACHED USING BRIDGE CLIP

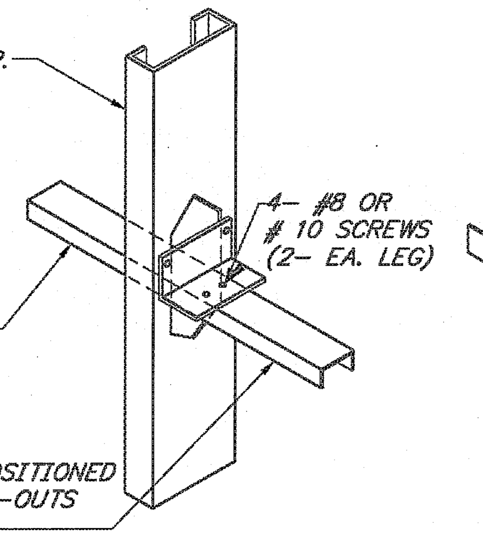

NOTE '1': – USE 1/8" FILLET WELD FOR 16GA OR THICKER STUD.
– USE 1/16" FILLET WELD FOR 18GA AND THINNER STUD.

PROVIDE FLANGE BRACING AS SHOWN ON SIDE WITH NO FINISH MATERIAL AT EXTERIOR OR INTERIOR STUDS (BOTH SIDES IF NO FINISH EITHER SIDE) SPACE @ 4'-0" O.C. MAX.

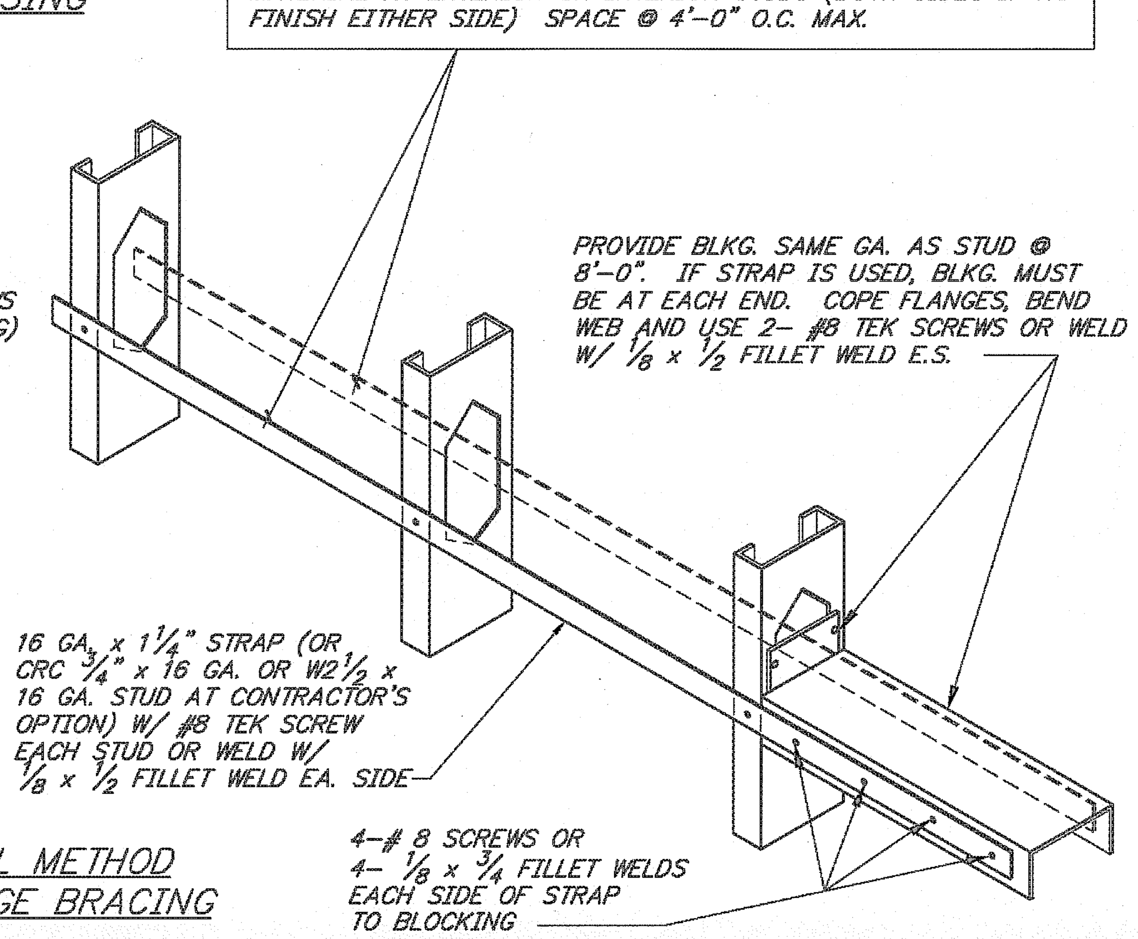

OPTIONAL METHOD OF FLANGE BRACING

STEEL STUD FLANGE BRACING DETAIL — NONE 2

MAXIMUM WALL HEIGHT FOR NON-BEARING INTERIOR STEEL STUDS, 'S162' SECTIONS (*)					
TYPE	STUD SPACE	16 GA (54)	18 GA (43)	20 GA (33)	
362S162	16"	12'-6"		10'-6"	
400S162	16"	18'-0"		14'-2"	
600S162	16"	28'-0"	26'-0"	19'-0"	
800S162	16"	32'-0"	30'-0"		

* SEE NOTE #3 UNDER GENERAL

METAL STUD SECTION PROPERTIES (EFFECTIVE)		
SECTION	Sxx (in³)	Ixx (in⁴)
250S162.33 250S162.54	0.180 0.295	0.235 0.370
362S162.33 362S162.54	0.292 0.481	0.551 0.873
400S162.33 400S162.43 400S162.54	0.332 0.443 0.549	0.692 0.892 1.098
600S162.33 600S162.43 600S162.54	0.577 0.767 0.953	1.793 2.316 2.860
800S162.43 800S162.54	1.158 1.434	4.633 5.736

TRACK SECTION	Sxx (in^3)	Ixx (in^4)
250T150_54	0.273	0.368
400T150_54	0.489	1.025
600T150_54	0.843	2.611
800T150_54	1.272	5.214

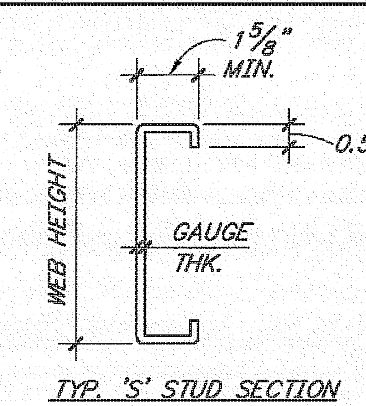

TYP. 'S' STUD SECTION

MAXIMUM SPAN FOR CEILING JOIST			
		INTERIOR	EXTERIOR (15 PSF MAX.)
TYPE	GUAGE / SPACING	18 (43)	16 (54)
400S162	16"	9'-6"	11'-1"
600S162	16"	13'-6"	12'-4"

NOTES:

GENERAL:

1. METAL STUD EFFECTIVE PROPERTIES ARE: Fy=50ksi FOR 14 AND 16 GAUGE SECTIONS. Fy=33ksi FOR 18 AND 20 GAUGE SECTIONS.
2. 362S162–33 DENOTES MANUFACTURERS CALL-OUT FOR A STUD, WITH 1 5/8" FLANGE LENGTH & 3 5/8" DEEP & HAS A THICKNESS OF 20 GAUGE.
3. THE MAX. HEIGHT GIVEN ARE BASED ON THE ASSUMPTION OF 5 PSF MAX. LATERAL LOAD AND THE WALL IS A NON-BEARING WALL (NOT SUPPORT ANY LOAD, SUCH AS CABINET, SHELF, ETC.) SUPPORTING LOAD, SEE NOTES UNDER PARTITION THIS DETAIL.

CEILING JOIST (FOR DRYWALL SUPPORT ONLY):

1. ALL DBL JOIST TO BE 18 GA. & SECTION PROPERTIES PER TABLE.
2. TOP OF ALL CEILING JOIST WITHOUT APPROVED CONTINUOUS SHEATHING SHALL BE BRACED AT 48" O.C. MAX. (4/–)
3. THE MAX. CLEAR SPAN GIVEN ARE BASED ON THE FOLLOWING ASSUMPTION:
   A) 10 PSF DEAD LOAD AND 10 PSF LIVE LOAD FOR INTERIOR.
   B) CONTINUOUS LATERAL SUPPORT OF COMPRESSION FLANGE.
   C) BRIDGING REQUIREMENT AS PER DETAIL (4/–)
   D) WEB PUNCHOUT IS NOT ALLOWED

PARTITIONS:

1. ALL TRACKS TO BE SAME GAUGE AS STUDS OR JOIST FRAMING TO THEM UNLESS THICKER GAUGE REQUIRED AS NOTED BELOW OR SCHEDULE:
2. ALL STUDS SUPPORTING DBL JOIST TO BE 16 GA x 1 5/8" FLANGE.
3. ALL PARTITIONS SUPPORTING ANY OF THE FOLLOWING ITEMS SHALL BE 16 GA x 1 5/8" FLANGE:
   A) HUNG CABINETS.
   B) FREE STANDING CABINETS AND EQUIPMENT TALLER THAN 36" ANCHORED TO WALL.
   C) ANY WALL HUNG ITEM HAS WEIGHT (INCLUDING CONTENTS) OVER 20 LBS TOTAL SUPPORT BY A SINGLE STUD
   D) MAXIMUM WEIGHT SHALL NOT EXCEED 150# PER FOOT FOR HUNG CABINET.
4. FOR WALL W/ COUNTER TO BRACKET ATTACHMENT
   H = 12'-0" MAX. USE 2- 400S162.54 STUD
   H = 12'-1" TO 14'-0" MAX. USE 2- 600S162.54 STUD
   H = 14'-1" TO 20'-0" MAX. USE 3- 600S162.54 STUD
5. PENETRATION THRU STUD PER MANUF. RECOMMENDATION & SUBJECT FOR ARCHT'S APPROVAL.

CEILING JOIST, INTERIOR MTL. STUD SCHED. AND SECTION PROPERTIES — NONE 3

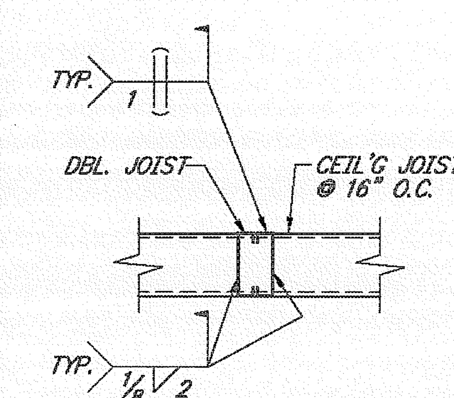

SECTION 'B-B'

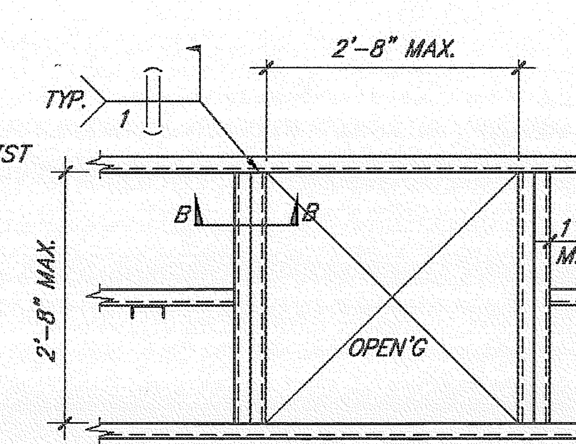

PLAN VIEW

PROVIDE HANGER TYP. EA. SIDE OF OPEN'G. PER (5/–)

RECOMMENDED MINIMUM JOIST BRIDGING

INSTALL 16 GAGE SOLID BRIDGING IN FIRST TWO AND LAST TWO JOIST SPACES. STARTING AT THIRD JOIST SPACE, INSTALL 2"x16 GAGE STRAP BRIDGING, TOP AND BOTTOM, EXTENDING FOR FIVE SPACES. FOLLOW WITH CHANNEL BRIDGING IN ONE SPACE. REPEAT TO COMPLETION, WITH FIVE SPACES OF STRAP BRIDGING, FOLLOWED BY ONE SPACE IF CHANNEL BRIDGING.

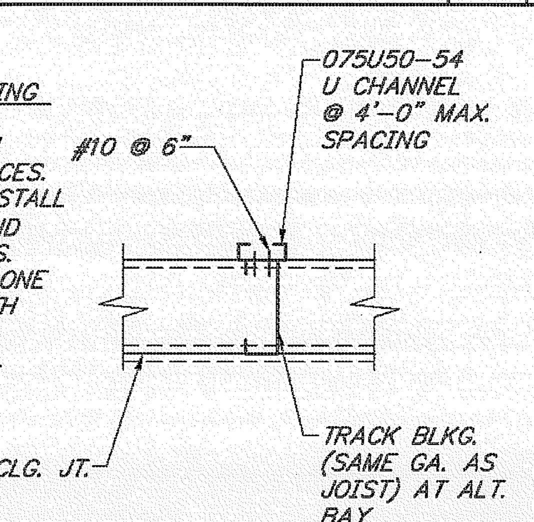

'A' ALT. BRACING DETAIL

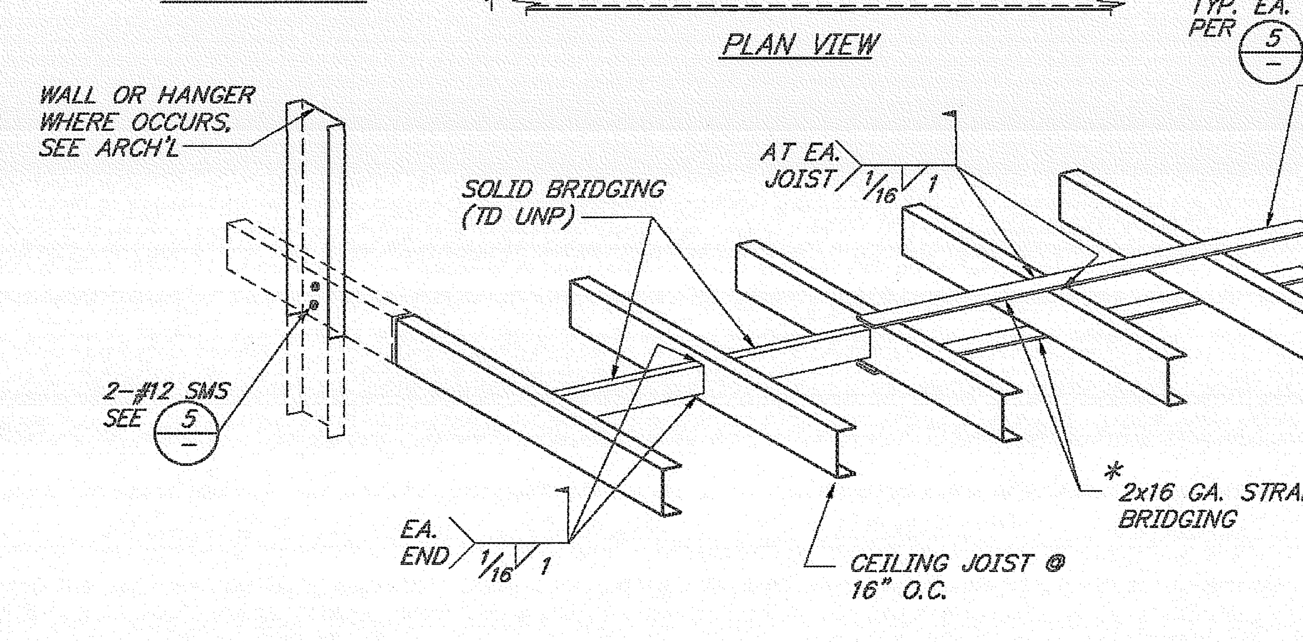

BRIDGING REQUIREMENTS

SPANS: 0 – 7' NOT REQUIRED
7' – 15' ONE ROW AT MID-SPAN

* BOTTOM STRAP OMITTED WHEN GYPSUM BOARD IS APPLIED TO BOTTOM FLG.

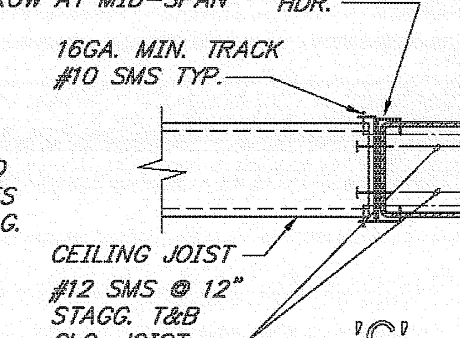

'C'

TYPICAL CEILING JOIST BRIDGING & BRACING — NONE 4

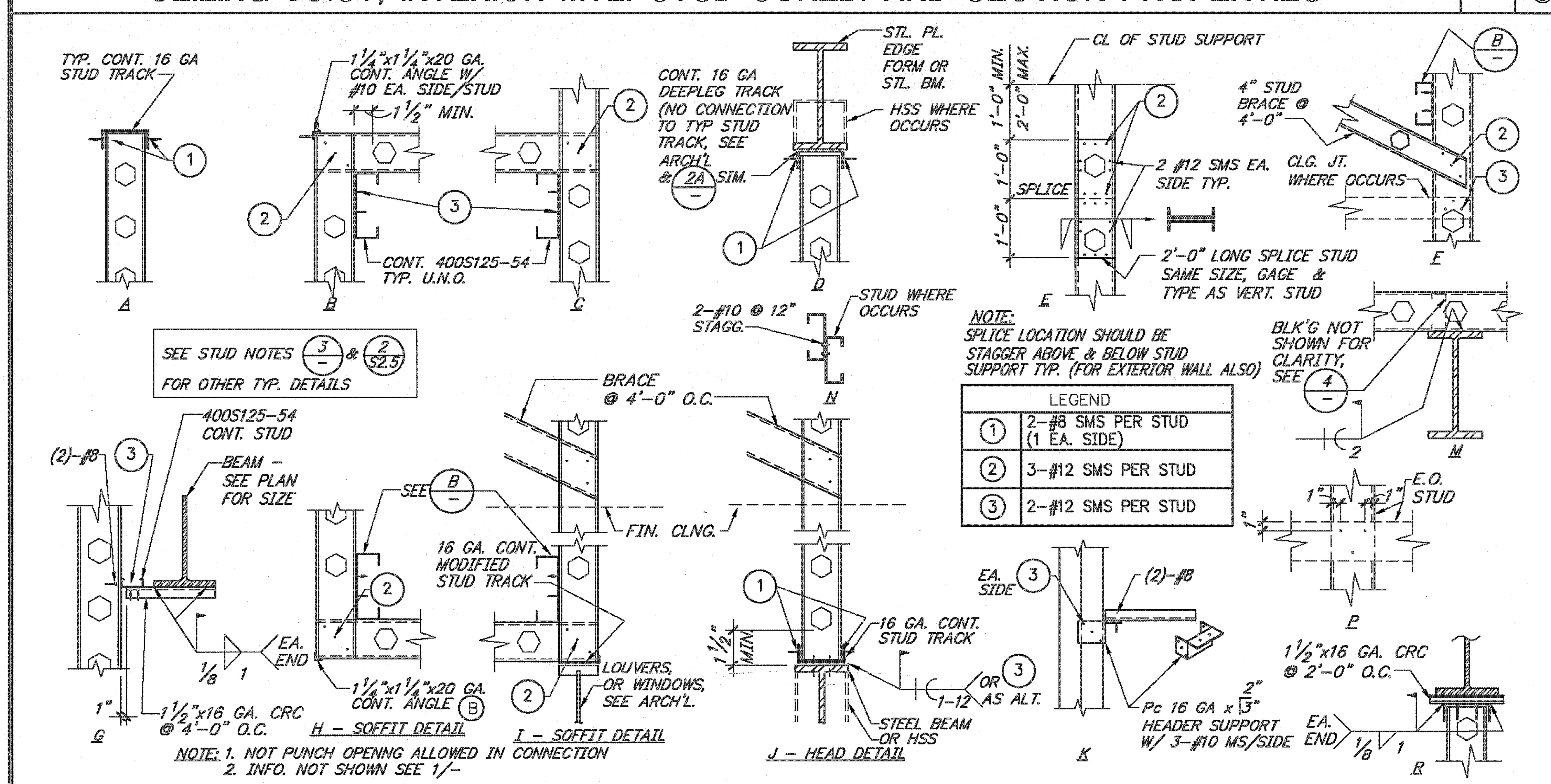

NOTE: SPLICE LOCATION SHOULD BE STAGGER ABOVE & BELOW STUD SUPPORT TYP. (FOR EXTERIOR WALL ALSO)

LEGEND	
①	2-#8 SMS PER STUD (1 EA. SIDE)
②	3-#12 SMS PER STUD
③	2-#12 SMS PER STUD

NOTE: 1. NOT PUNCH OPENNG ALLOWED IN CONNECTION
2. INFO. NOT SHOWN SEE 1/–

TYPICAL INTERIOR/EXTERIOR METAL STUD DETAILS — NONE 5

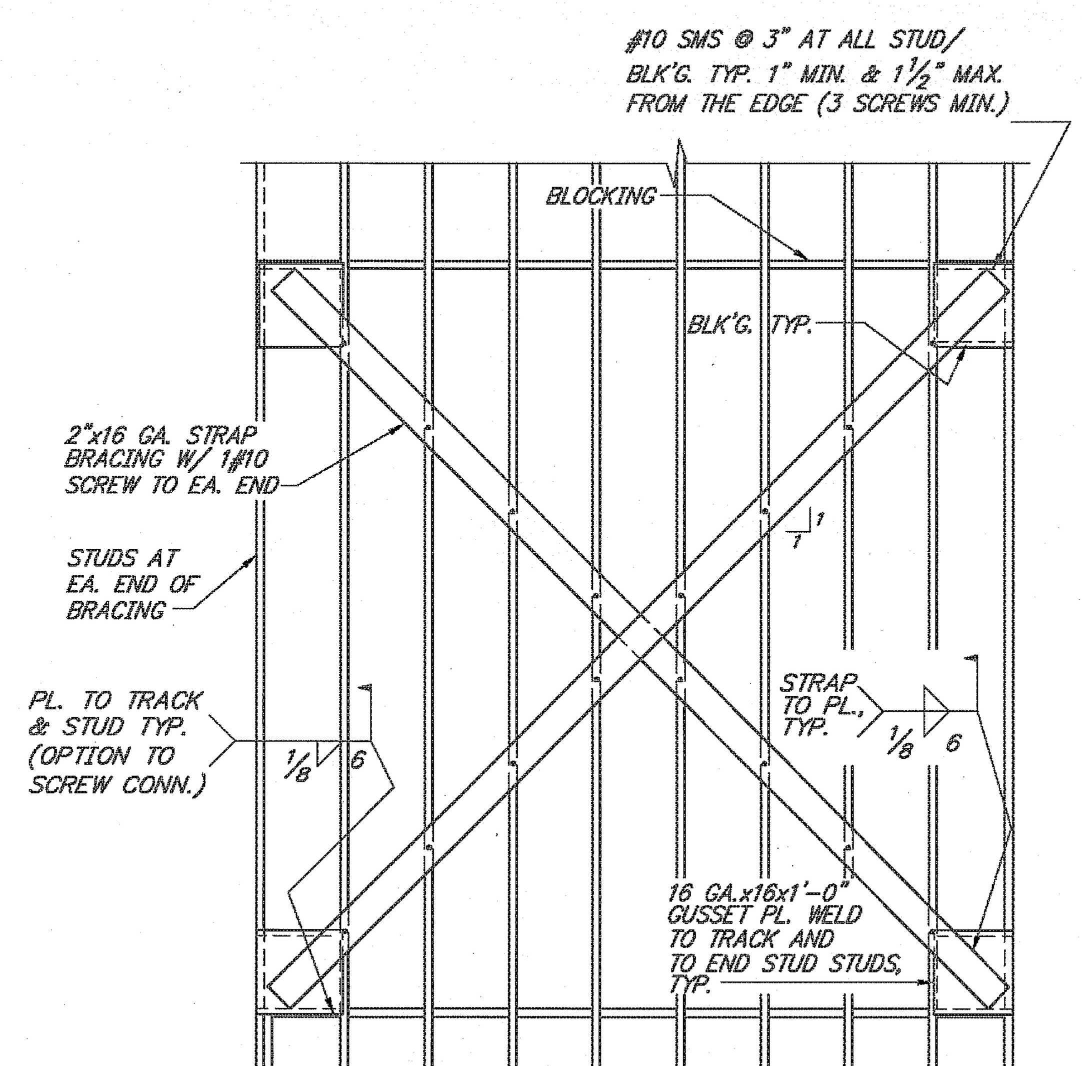

STUD BRACING DETAIL — NONE 6

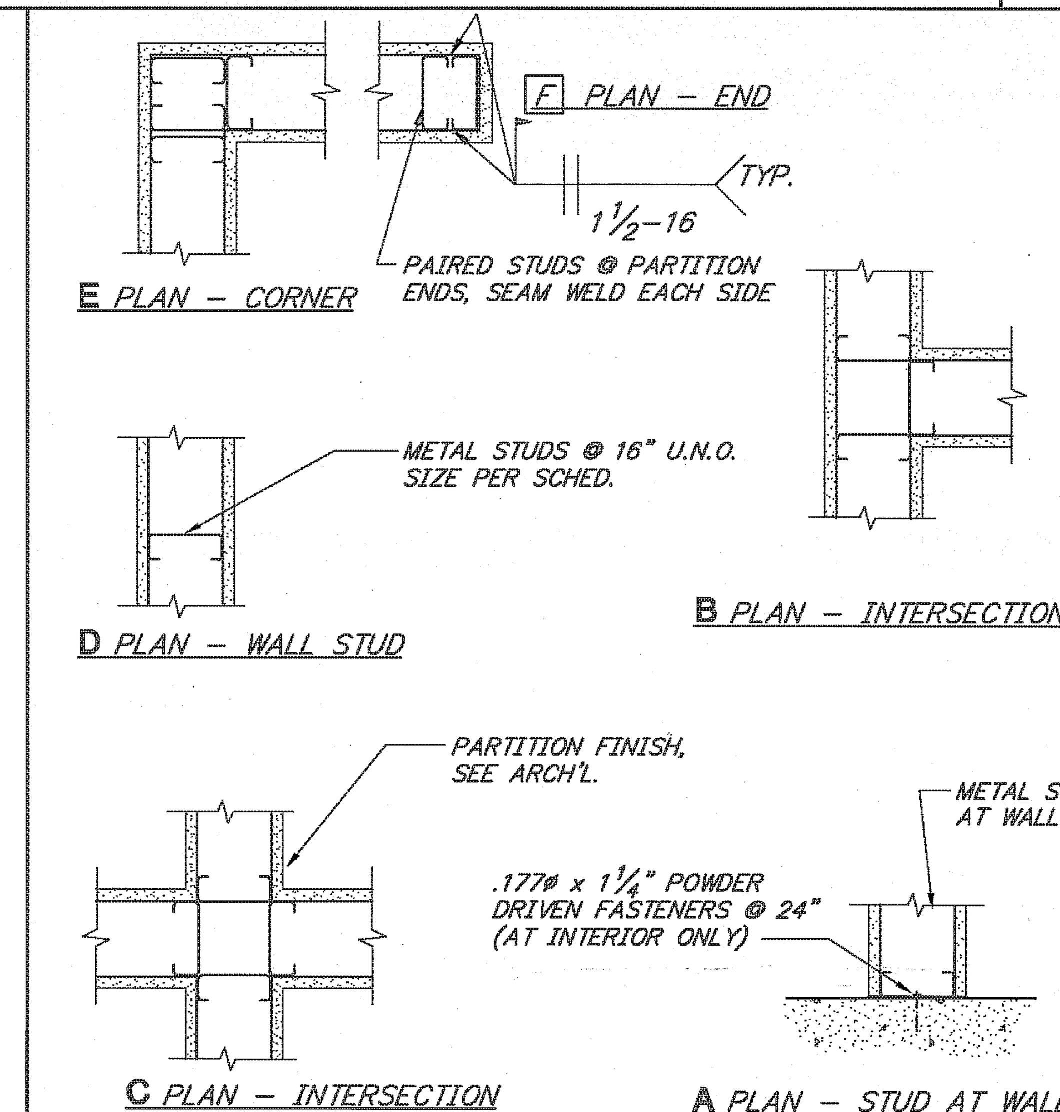

TYPICAL DETAILS AT WALLS — NONE 7

MIG
MOORE IACOFANO GOLTSMAN, INC.
801 N. HARBOR BLVD. FULLERTON, CA 92831
TEL 714/871-3638 FAX 714/871-1188 www.migcom.com

PITASSI ARCHITECTS, INC.
8439 White Oak Ave., Suite. 105
Rancho Cucamonga, Ca 91730
Tel. 909-980-1361 ▪ Fax. 909-944-5814
e-mail. pjpaia@pitassiarchitects.com

CONSULTANT:
TMAD TAYLOR & GAINES
• STRUCTURAL • MECHANICAL • ELECTRICAL • CIVIL
800 North Ferrari Lane, Suite 100
Ontario, California 91764
Phone: 909.477.6915 Fax: 909.477.6919
www.tmadtg.com Project No. 4008.056.00

PERRIS VALLEY Big League Dreams

2155 Trumble Road
Perris, California 92570

SHEET TITLE

100% CONSTRUCTION DOCUMENT

DATE	REVISIONS

STAMP

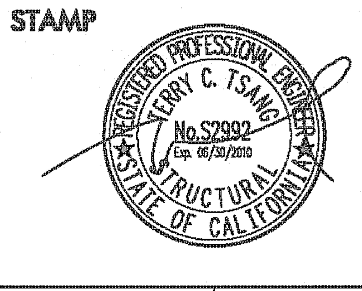

CHECKED BY	DATE
SY	.
DATE 01-07-10	FILE NAME
DRAWN BY DG	SHEET S-2.4
JOB NO. 05208.00	
SCALE NOTED	OF SHEETS