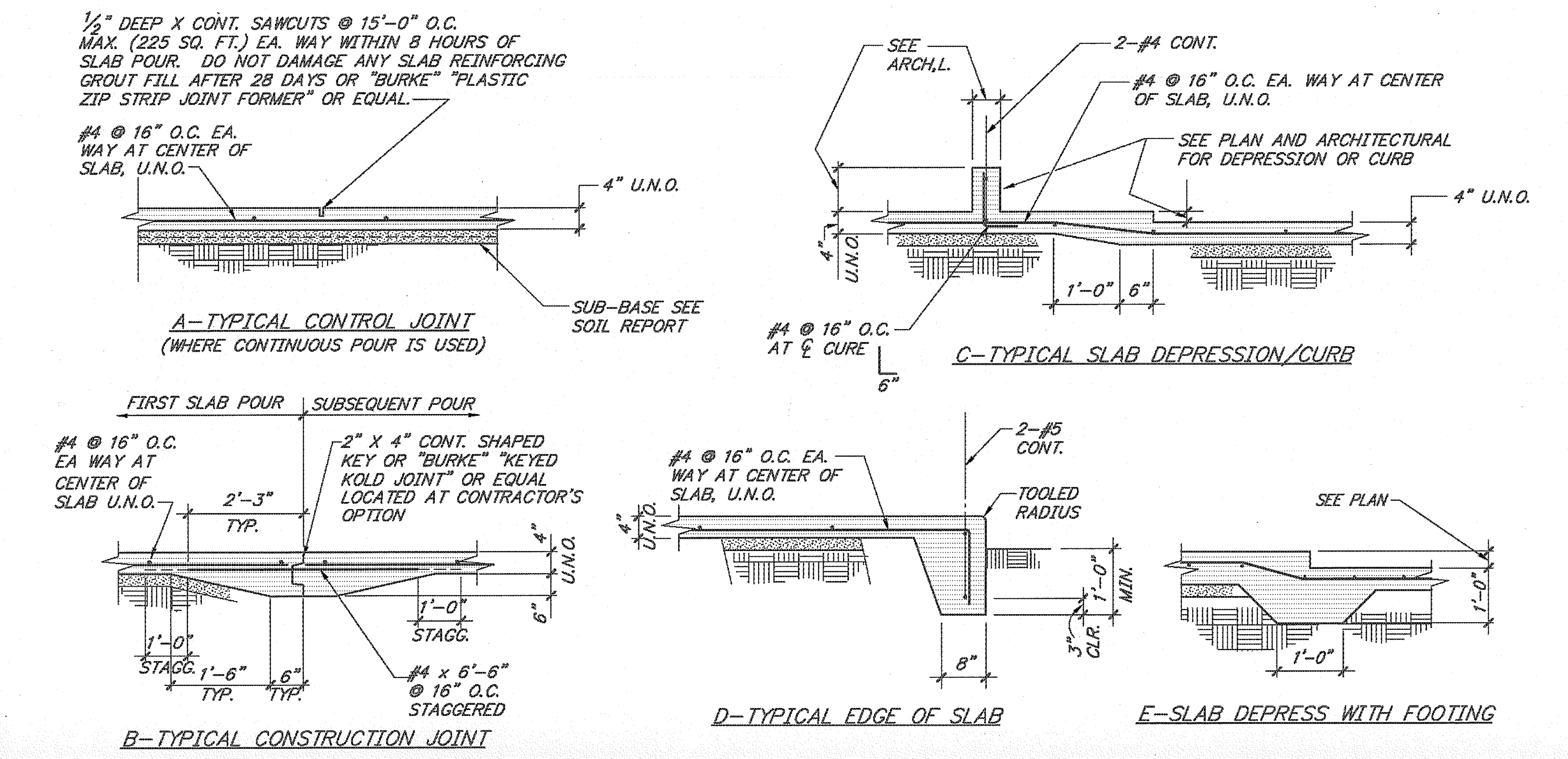


TYPICAL SLAB ON GRADE DETAIL NONE 1

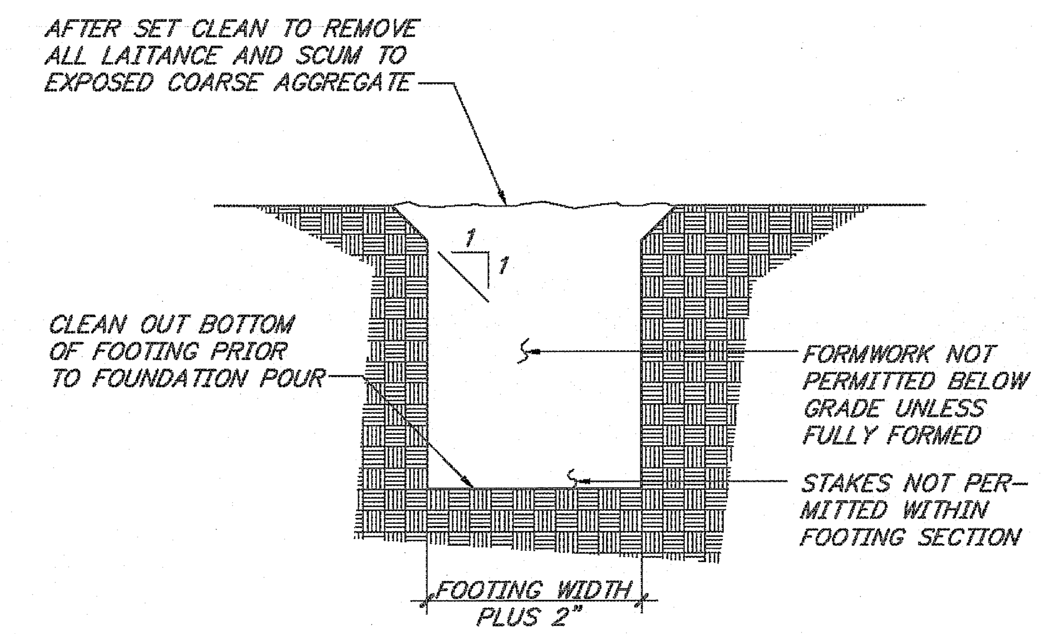


NOTE:

1. FOUNDATION CONCRETE MAY BE PLACED DIRECTLY INTO EXCAVATION (AS SHOWN) PROVIDED THE TRENCH WALLS ARE STABLE AS DETERMINED BY THE SOIL ENGINEER.
2. FOUNDATIONS SHALL BEAR ON ACCEPTABLE SOIL, PER THE SOIL REPORT, AS DETERMINED BY THE SOIL ENGINEER.

TYPICAL FOOTING FORMING DETAIL NONE 2

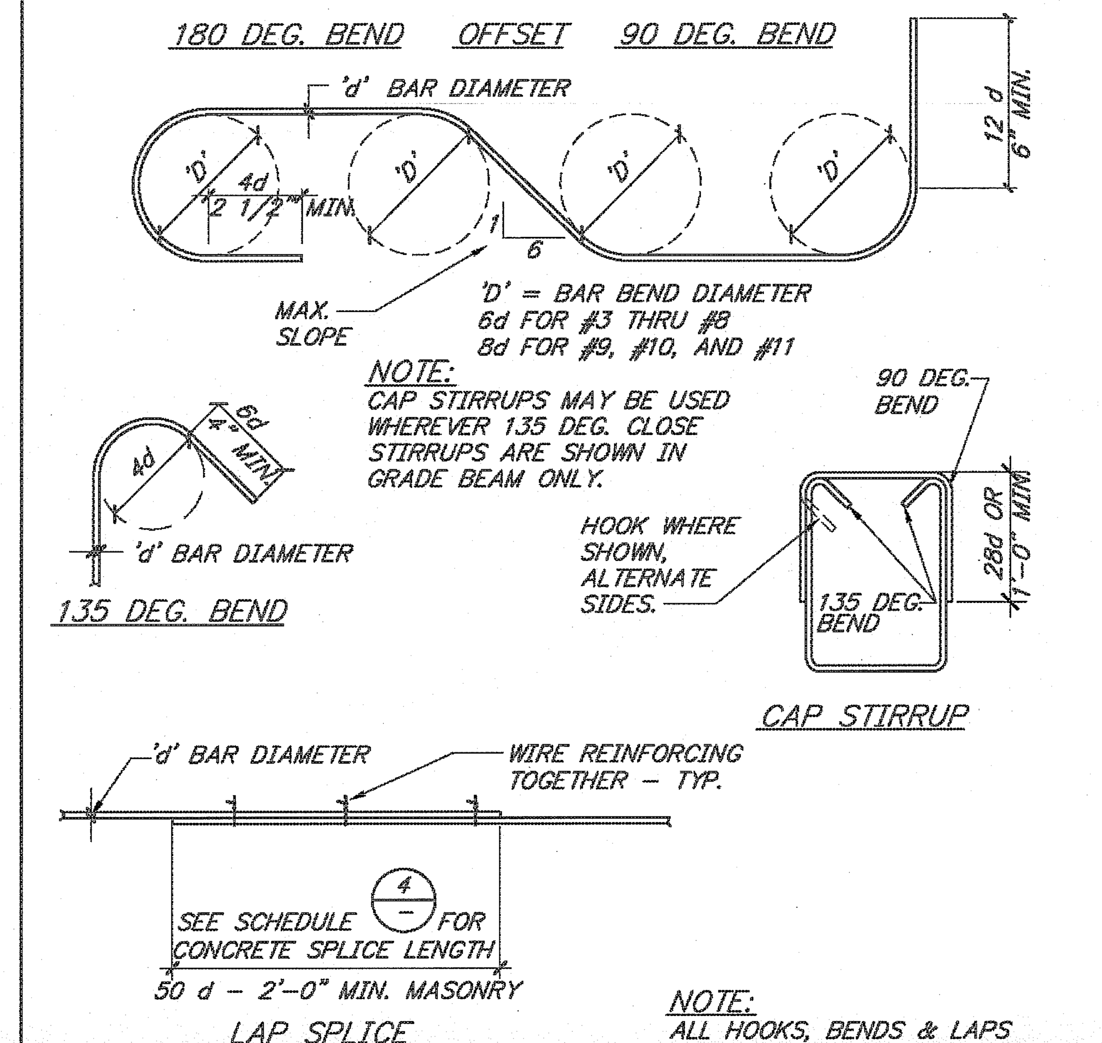


NOTE:
ALL HOOKS, BENDS & LAPS SHALL BE AS INDICATED, U.N.O.

TYPICAL REINFORCING DETAIL NONE 3

ACI TENSION LAP SPLICE FOR $f'_c$= 3,000 , 4,000 AND 5,000 psi

| Bar Size | Lap Class | $f'_c$= 3,000 psi | | | | $f'_c$= 4,000 psi | | | | $f'_c$= 5,000 psi | | | |
|---|---|---|---|---|---|---|---|---|---|---|---|---|---|
| | | Top Bars | | Other Bars | | Top Bars | | Other Bars | | Top Bars | | Other Bars | |
| | | Case 1 | Case 2 | Case 1 | Case 2 | Case 1 | Case 2 | Case 1 | Case 2 | Case 1 | Case 2 | Case 1 | Case 2 |
| #3 | B | 28 | 42 | 22 | 32 | 24 | 36 | 19 | 28 | 22 | 33 | 17 | 25 |
| #4 | B | 37 | 56 | 29 | 43 | 32 | 48 | 25 | 37 | 29 | 43 | 22 | 33 |
| #5 | B | 47 | 70 | 36 | 54 | 40 | 60 | 31 | 47 | 36 | 54 | 28 | 42 |
| #6 | B | 56 | 84 | 43 | 64 | 48 | 72 | 37 | 56 | 43 | 65 | 33 | 50 |
| #7 | B | 81 | 122 | 63 | 94 | 70 | 106 | 54 | 81 | 63 | 94 | 49 | 73 |
| #8 | B | 93 | 139 | 72 | 107 | 80 | 121 | 62 | 93 | 72 | 108 | 55 | 83 |
| #9 | B | 105 | 157 | 81 | 121 | 91 | 136 | 70 | 105 | 81 | 122 | 63 | 94 |
| #10 | B | 118 | 177 | 91 | 136 | 102 | 153 | 79 | 118 | 91 | 137 | 70 | 105 |
| #11 | B | 131 | 196 | 101 | 151 | 113 | 170 | 87 | 131 | 101 | 152 | 78 | 117 |

NOTES:

1. TABULATED VALUES ARE BASED ON GRADE 60 REINFORCING BARS AND NORMAL-WEIGHT CONCRETE.
2. TENSION DEVELOPMENT LENGTHS AND TENSION LAP SPLICE LENGTHS ARE BASED ON ACI 318-05, SECTIONS 12.2.2 AND 12.15, RESPECTIVELY. TABULATED VALUES FOR BEAMS OR COLUMNS ARE BASED ON TRANVERSE REINFORCEMENT AND CONCRETE COVER MEETING MINIMUM CODE REQUIREMENTS. LENGTHS ARE IN INCHES.
3. CASES 1 AND 2, WHICH DEPEND ON THE TYPE OF STRUCTURAL MEMBER, CONCRETE COVER, AND THE CENTER-TO-CENTER SPACING OF THE REINFORCING BARS, ARE DEFINED AS:

| | | |
|---|---|---|
| Beams or Columns | Case 1 | Cover at least $1d_b$ and c.-c. spacing at least $2d_b$ |
| | Case 2 | Cover less than $1d_b$ or c.-c. spacing less than $2d_b$ |
| All Others | Case 1 | Cover at least $1d_b$ and c.-c. spacing at least $3d_b$ |
| | Case 2 | Cover less than $1d_b$ or c.-c. spacing less than $3d_b$ |

4. LAP CLASS A VALUES ARE THE THE REQUIRED TENSION DEVELOPMENT LENGTHS, $l_d$ ; LAP SPLICE LENGTHS ARE MULTIPLES OF TENSION DEVELOPMENT LENGTHS; CLASS B = 1.3 $l_d$ (ACI 318-02, SECTION 12.15.1).
5. TOP BARS ARE HORIZONTAL BARS WITH MORE THAN 12 INCHES OF CONCRETE CAST BELOW THE BARS.
6. FOR LIGHTWEIGHT AGGREGATE CONCRETE, MULTIPLY THE TABULATED VALUES BY 1.3 ; OR WHEN $f_{ct}$ IS SPECIFIED THE FACTOR IS $6.7\sqrt{f'_c} / f_{ct} \geq 1.0$ .
7. FOR EPOXY-COATED REINFORCING BARS, MULTIPLY THE TABULATED VALUES BY ONE OF THE FOLLOWING FACTORS:

| Concrete Cover and Spacing | Top Bars | Other Bars |
|---|---|---|
| Cover < $3d_b$ or c.-c. spacing < $7d_b$ | 1.7/1.3 = 1.31 | 1.50 |
| Cover ≥ $3d_b$ and c.-c. spacing ≥ $7d_b$ | 1.20 | 1.20 |

LAP SPLICE SCHEDULE NONE 4

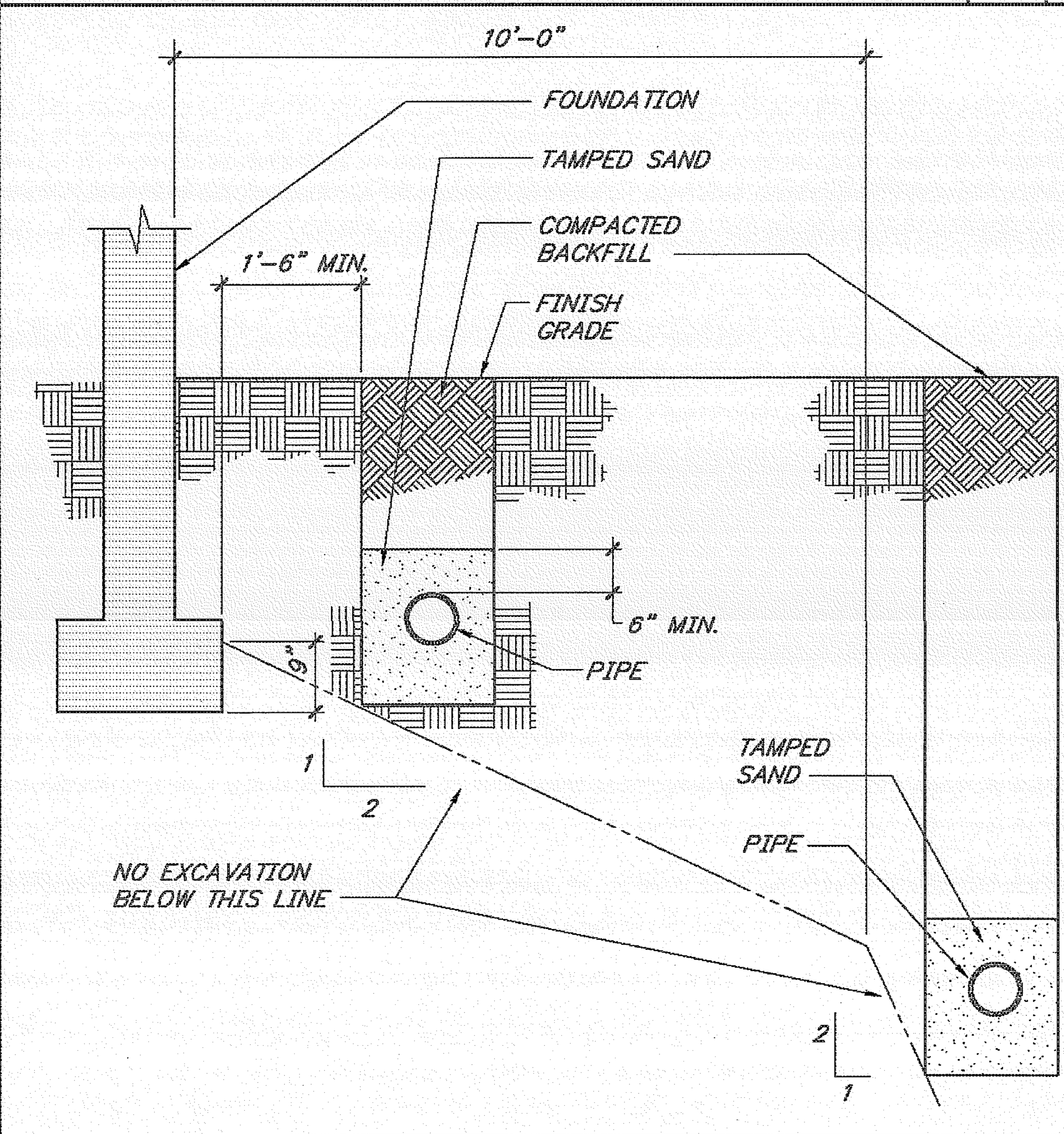


TYP. PIPE TRENCH PARALLEL W/ FOUNDATION NONE 5

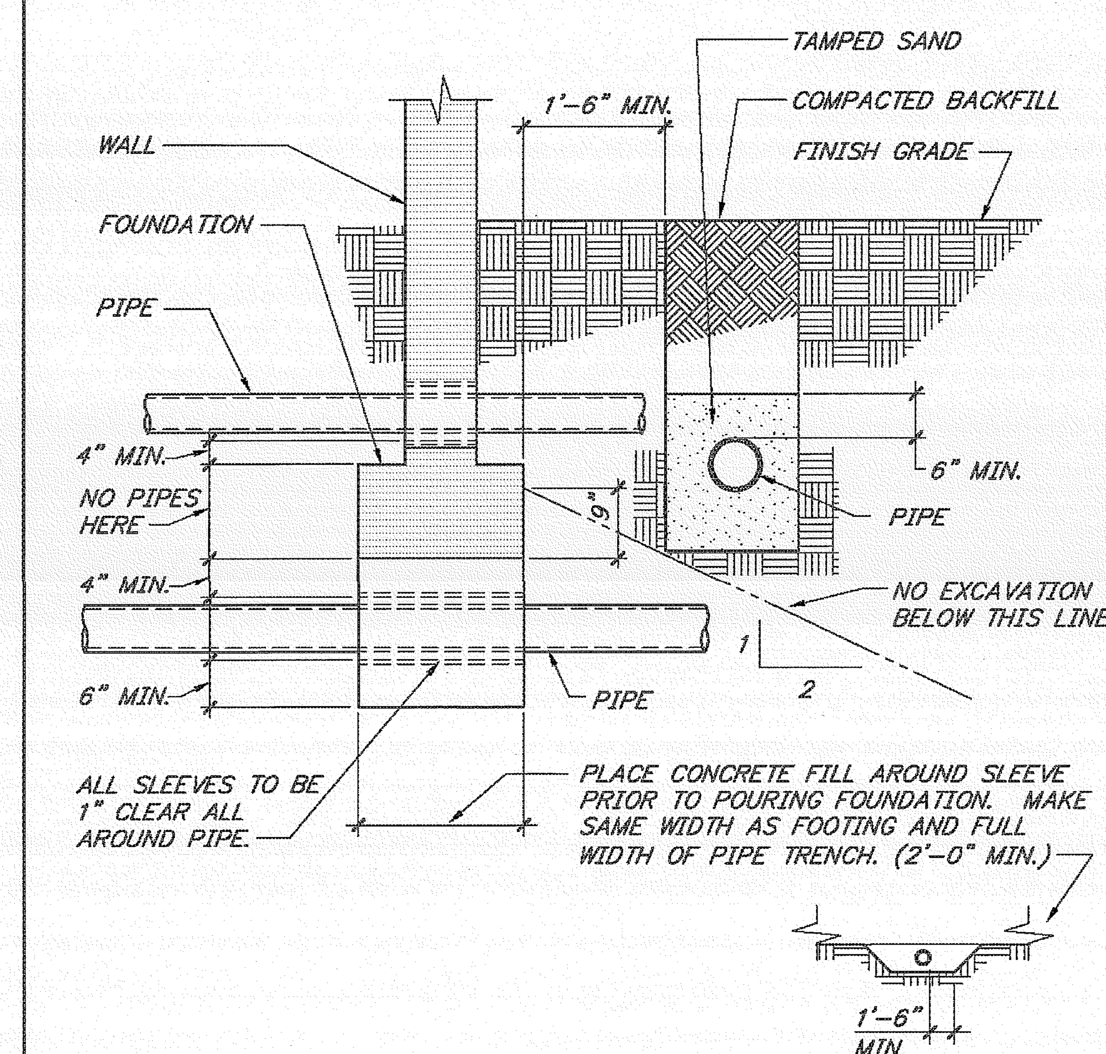


TYPICAL PIPE TRENCH DETAIL NONE 6

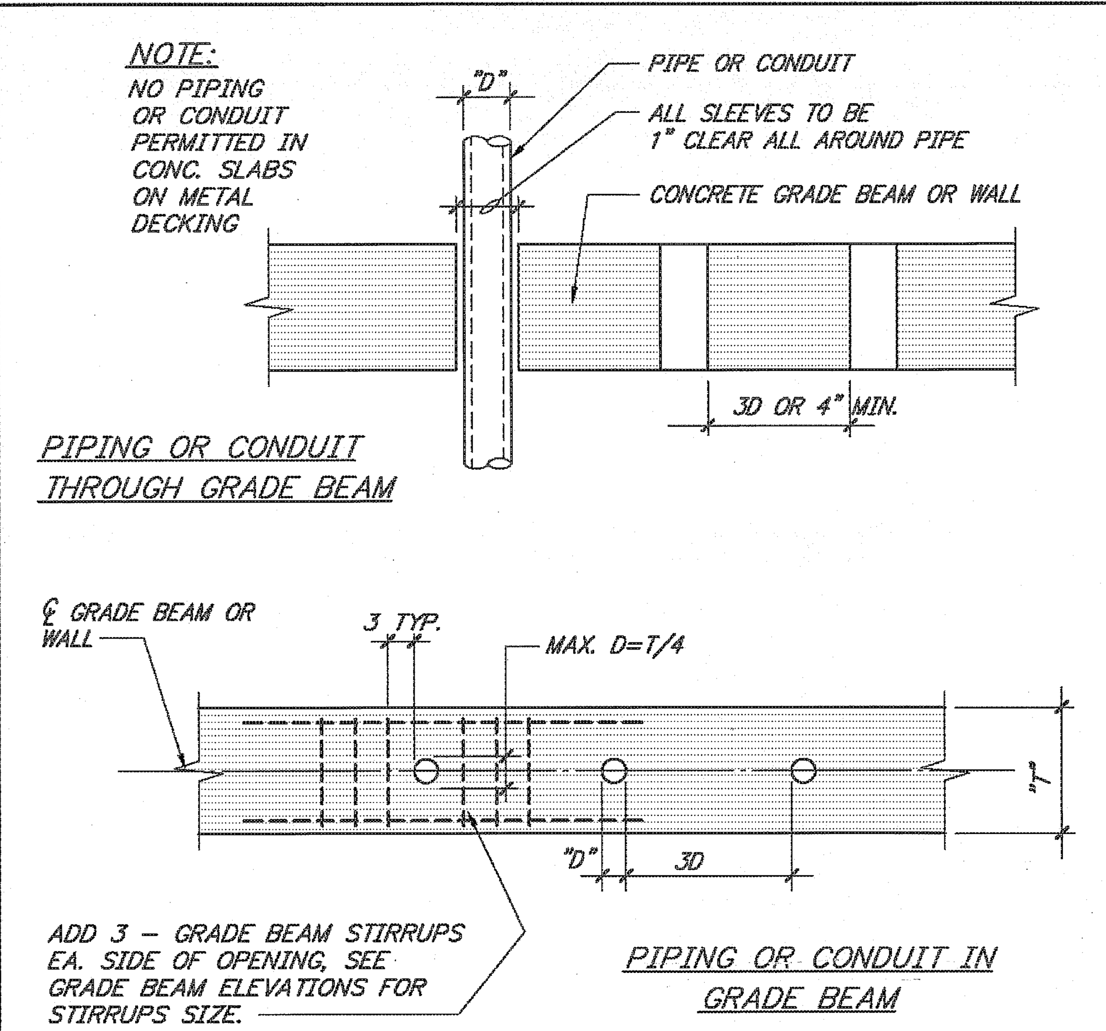


* MAX. 2½" OUTSIDE DIA. FOR SLEEVES SCHEDULE 40.

TYP. PIPE OR CONDUIT THRU CONC. NONE 7

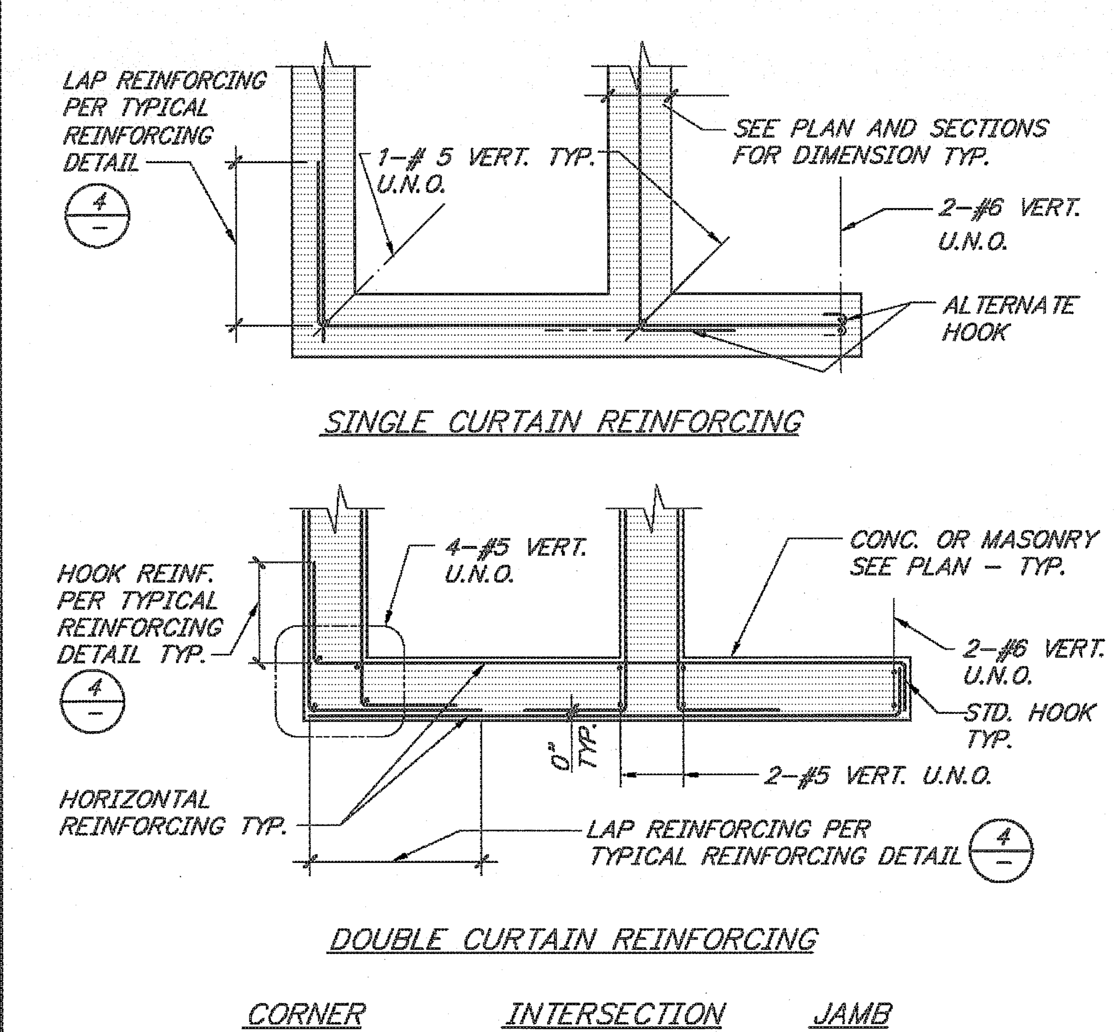


TYPICAL REINF. AT INTERSECTION NONE 8

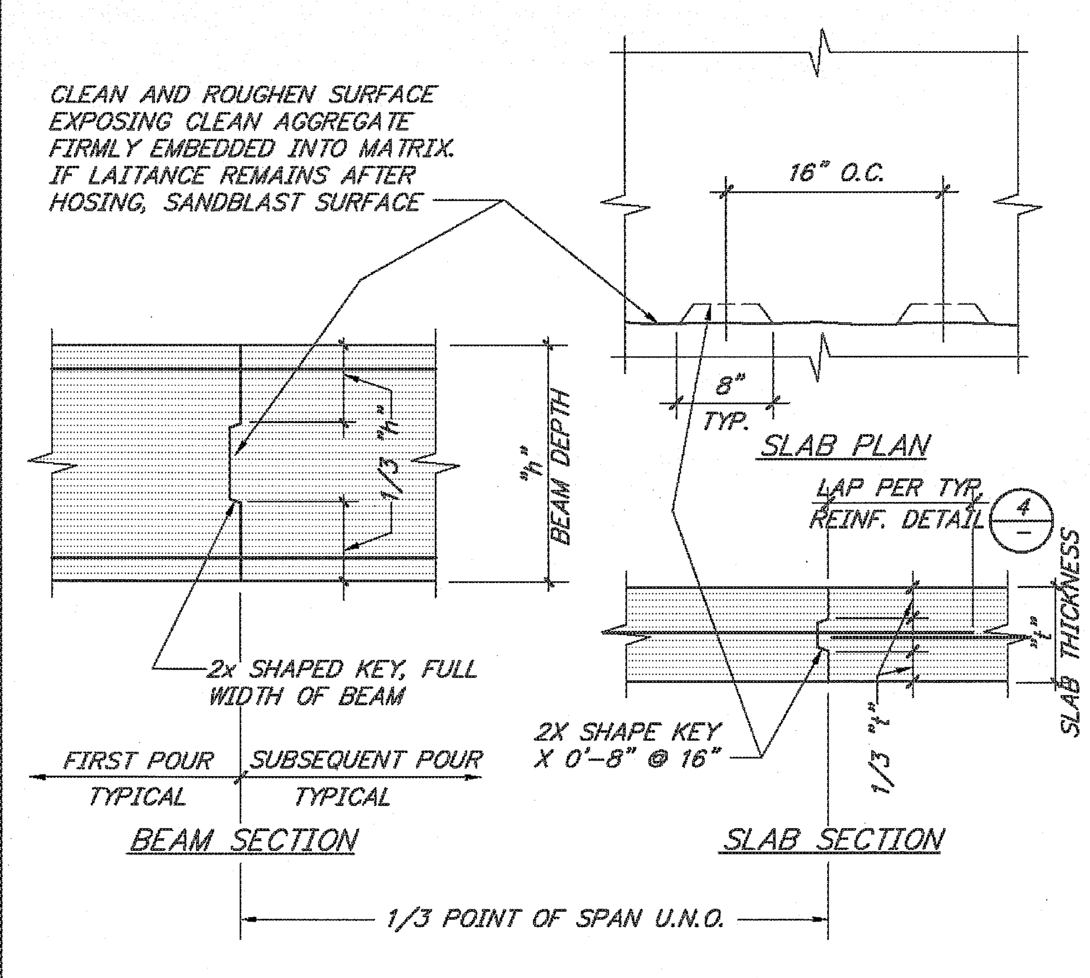


TYPICAL CONST. JOINT DETAILS NONE 9

FOOTINGS POURED AGAINST EARTH ........................ 3"

FORMED SURFACES BELOW GRADE ........................ 2"

WALLS: EXTERIOR SURFACES ABOVE GRADE ........................ 2"

INTERIOR SURFACES ........................ 1"

COLUMNS AND BEAMS TO MAIN REINFORCING ........................ 2"

JOIST TO MAIN REINFORCING ........................ 1"

STRUCTURAL SLABS, TOP AND BOTTOM ........................ ¾"

CONCRETE PROTECTION FOR REINFORCING STEEL NONE 10


M I G
MOORE IACOFANO GOLTSMAN, INC.
801 N. HARBOR BLVD. FULLERTON, CA 92831
TEL 714/871-3638 FAX 714/871-1188 www.migcom.com

PITASSI ARCHITECTS, INC.
8439 White Oak Ave., Suite. 105
Rancho Cucamonga, Ca 91730
Tel. 909-980-1361 ▪ Fax. 909-944-5814
e-mail. pjpaia@pitassiarchitects.com

CONSULTANT:
TMAD TAYLOR & GAINES
▪ STRUCTURAL ▪ MECHANICAL ▪ ELECTRICAL ▪ CIVIL
800 North Ferrari Lane, Suite 100
Ontario, California 91764
Phone: 909.477.6915 Fax: 909.477.6919
www.tmadtg.com Project No. 4008.056.00


# PERRIS VALLEY Big League Dreams

2155 Trumble Road
Perris, California 92570

SHEET TITLE

100% CONSTRUCTION DOCUMENT

| DATE | REVISIONS |
|---|---|
| | |
| | |
| | |
| | |
| | |
| | |
| | |
| | |

STAMP

REGISTERED PROFESSIONAL ENGINEER TERRY C. TSANG No. S2992 Exp. 06/30/2010 STRUCTURAL STATE OF CALIFORNIA

| CHECKED BY | DATE |
|---|---|
| SY | . |
| DATE 01-07-10 | FILE NAME |
| DRAWN BY DG | SHEET S-1.2 |
| JOB NO. 05208.00 | |
| SCALE NOTED | OF SHEETS |