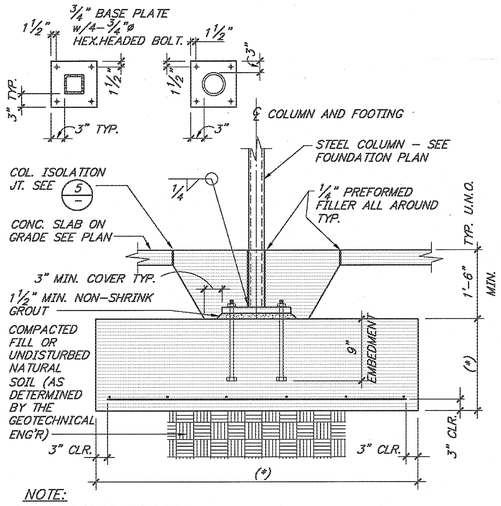


NOTE:
(*) SEE FOUNDATION PLAN FOR SIZE, THICKNESS AND REINFORCING

## COLUMN BASE PLATE DETAIL — NONE — 1

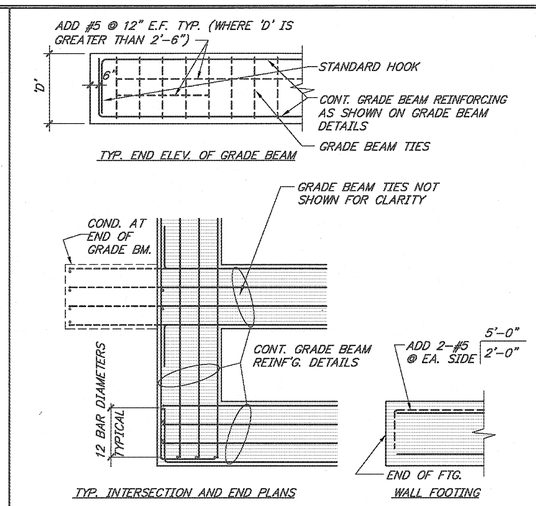


NOTE: GRADE BEAM REINFO., TOP LAYER OF HIGH REBARS & BOTTOM LAYER OF LOW REBARS 90° BEND FOR 50% OF REBARS, REMAINDER TO BE STRAIGHT. ALTERNATE STRAIGHT BAR AND BENT BAR.

## TYP. GRADE BEAM AND FOOTING REINFORCING — NONE — 2

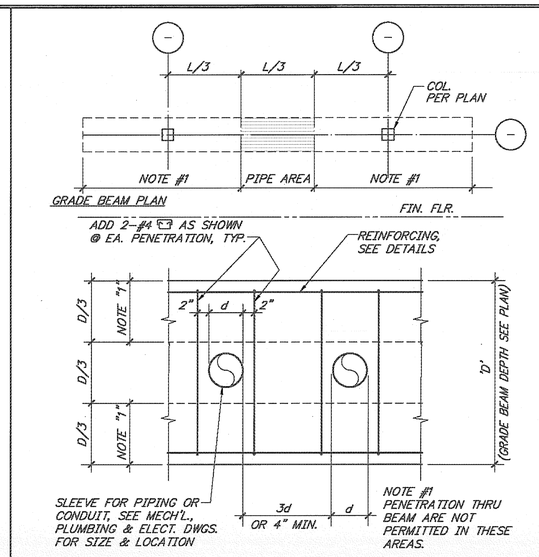


## PIPE AND CONDUIT THRU GRADE BEAM — NONE — 3

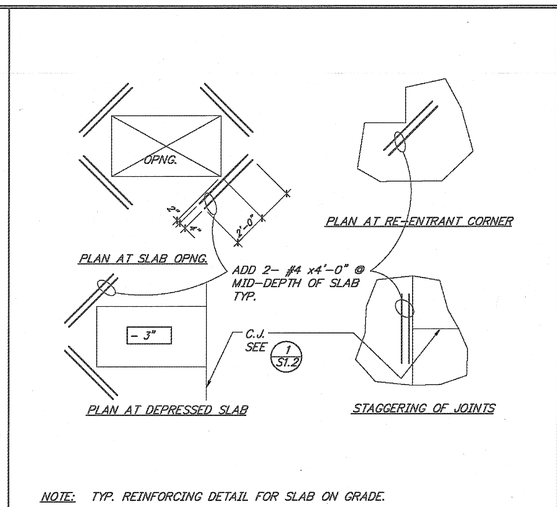


NOTE: TYP. REINFORCING DETAIL FOR SLAB ON GRADE.

## REINFORCING AT OPENING/CORNERS/JOINTS — NONE — 4

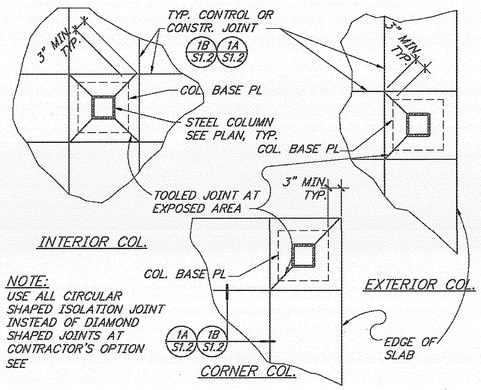


NOTE:
USE ALL CIRCULAR SHAPED ISOLATION JOINT INSTEAD OF DIAMOND SHAPED JOINTS AT CONTRACTOR'S OPTION SEE

## DIAMOND SHAPED ISOLATION JOINT — NONE — 5

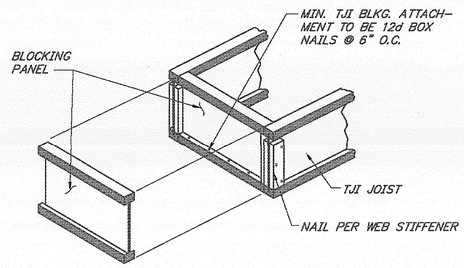


## TJI BLOCKING PANELS — NONE — 6

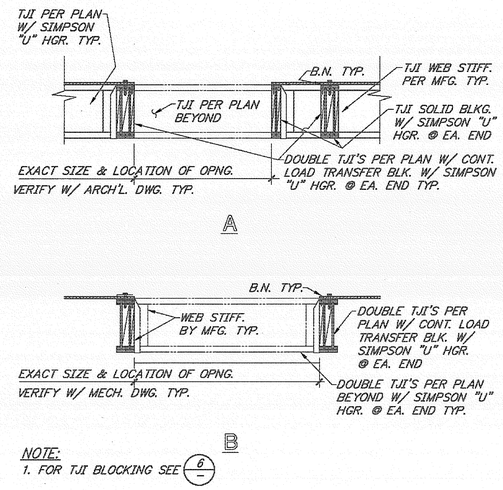


NOTE:
1. FOR TJI BLOCKING SEE 6

## TYPICAL OPENING FOR TJI JOIST — NONE — 7

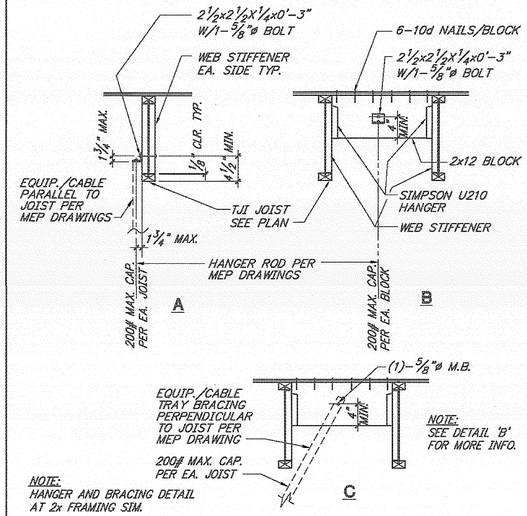


NOTE:
HANGER AND BRACING DETAIL AT 2x FRAMING SIM.

## TYPICAL HANGER AT TJI DETAIL — NONE — 8

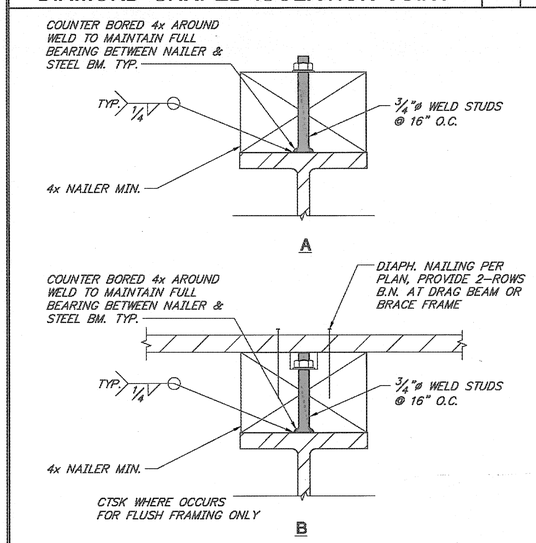


## CONNECTION DETAIL — NONE — 9

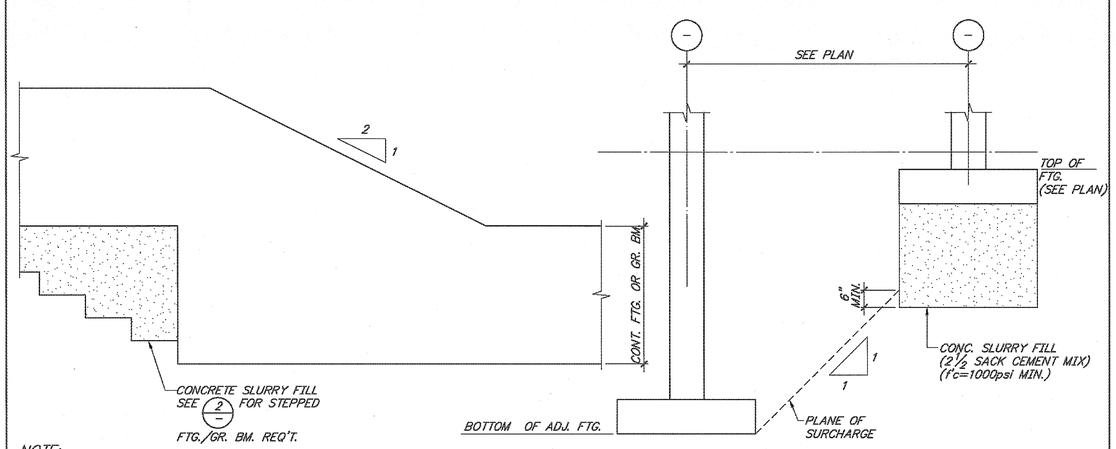


NOTE:
1. SLURRY FILL UNDER FOOTING SHOULD EXTEND A MIN. OF 6" BELOW THE "PLANE OF SURCHANRGE".
2. SEE NOTE #8 UNDER "EARTH WORK" ON SHEET S1.0.

## TYPICAL DETAIL FOR SLURRY FILL — NONE — 10

## NOT USED — - — 11


MIG
MOORE IACOFANO GOLTSMAN, INC.
801 N. HARBOR BLVD. FULLERTON, CA 92831
TEL 714/871-3433 FAX 714/871-1188
www.migcom.com

PITASSI ARCHITECTS, INC.
8439 White Oak Ave., Suite 105
Rancho Cucamonga, Ca 91730
Tel. 909-980-1361 = Fax. 909-944-5814
e-mail. pjpaia@pitassiarchitects.com

CONSULTANT:
TMAD TAYLOR & GAINES
• STRUCTURAL • MECHANICAL • ELECTRICAL • CIVIL
800 North Ferrari Lane, Suite 100
Ontario, California 91764
Phone: 909.477.6915 Fax: 909.477.6919
www.tmadtg.com Project No. 4008.056.00


# PERRIS VALLEY Big League Dreams

2155 Trumble Road
Perris, California 92570

SHEET TITLE

100% CONSTRUCTION DOCUMENT

| DATE | REVISIONS |
|---|---|
| | |

STAMP

REGISTERED PROFESSIONAL ENGINEER — SCOTT C. TSANG — No. S2992 — Exp. 12/31/10 — STRUCTURAL — STATE OF CALIFORNIA

| CHECKED BY | DATE |
|---|---|
| SY | . |
| DATE 01-07-10 | FILE NAME |
| DRAWN BY DG | SHEET S-2.3 |
| JOB NO. 05208.00 | OF SHEETS |
| SCALE NOTED | |