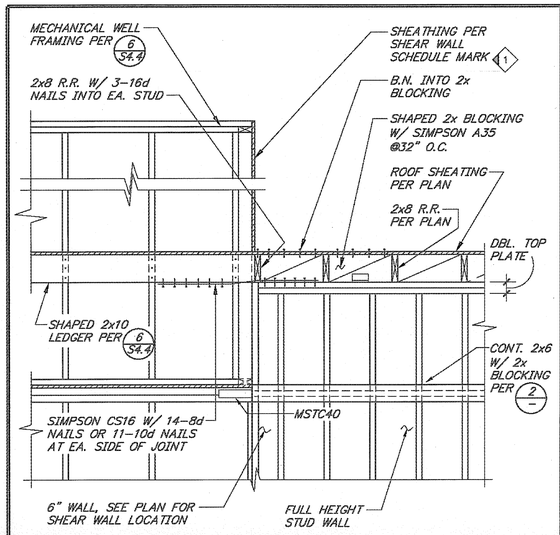


DETAIL NONE 1

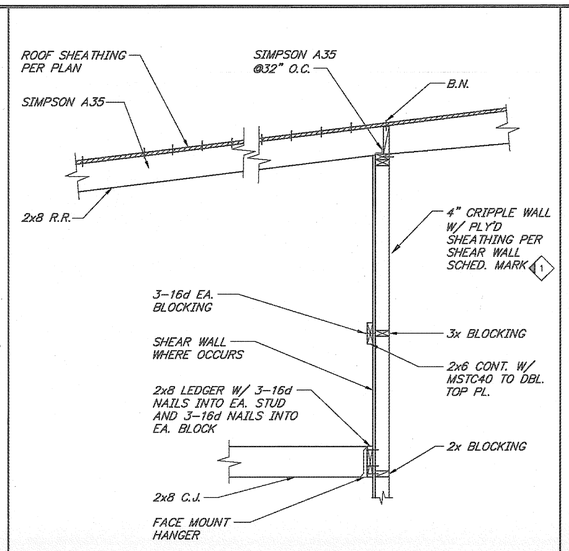


DETAIL NONE 2

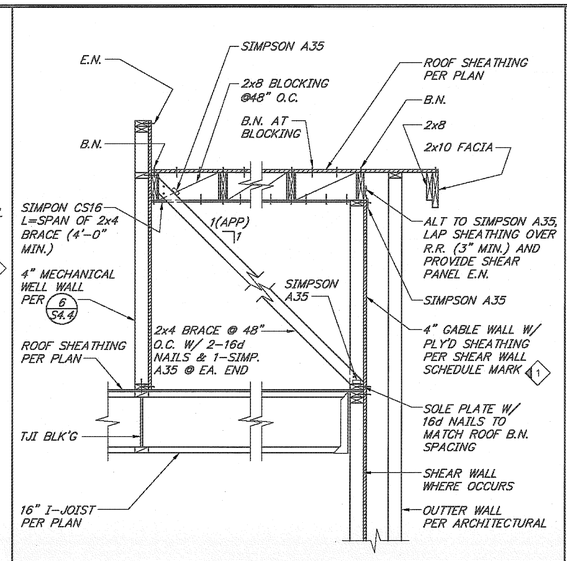


DETAIL NONE 3

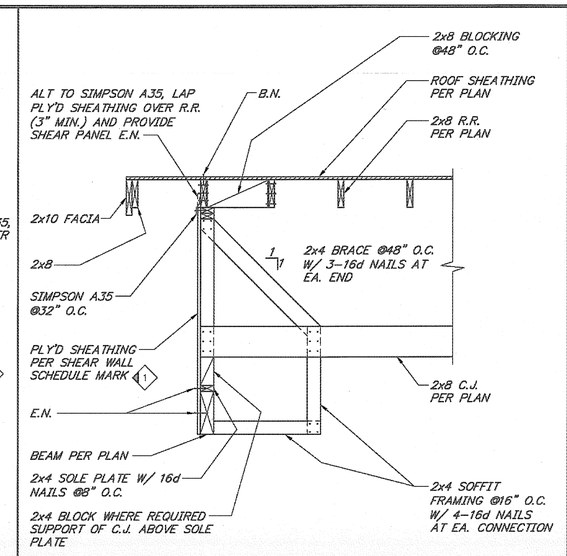


DETAIL NONE 4

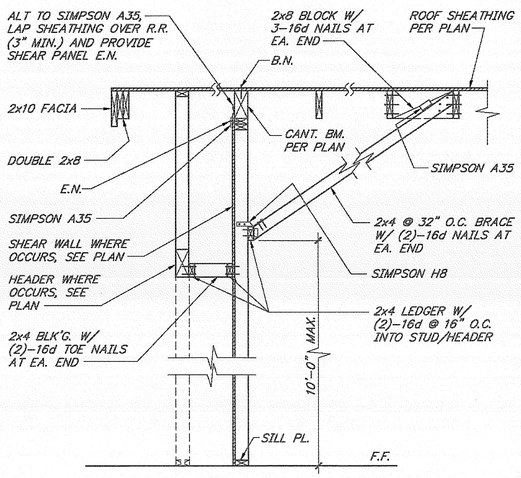


DETAIL NONE 5

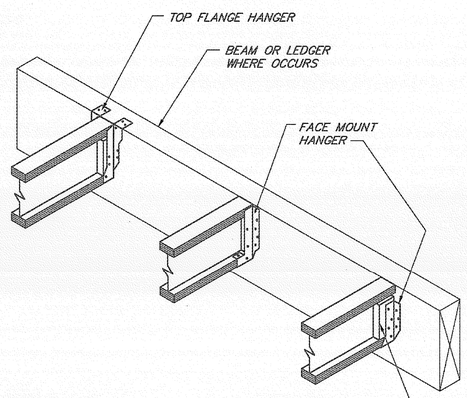


NOTE:
WEB STIFFENERS ARE REQD. IF THE SIDES OF THE HANGER DO NOT LATERALLY SUPPORT THE TJI JOIST TOP FLANGE

TYPICAL TJI HANGER DETAIL NONE 6

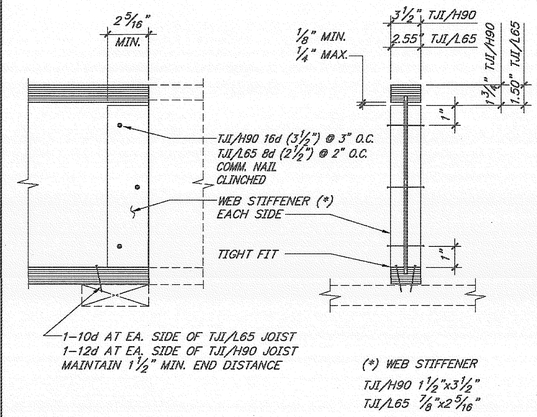


NOTES:
1. WEB STIFFENER MATERIAL SHALL BE SHEATHING MEETING THE REQUIREMENTS OF PS1 OR PS2 WITH FACE GRAIN PARALLEL TO LONG AXIS.
2. 2x4 CONSTRUCTION GRADE OR BETTER.

TYPICAL WEB STIFFENER DETAIL NONE 7

NOT USED - 8

NOT USED - 9

NOT USED - 10

NOT USED - 11

NOT USED - 12


MIG
MOORE IACOFANO GOLTSMAN, INC.
801 N. HARBOR BLVD. FULLERTON, CA 92831
TEL 714/871-3539 FAX 714/871-1169
www.migpsom.com

PITASSI ARCHITECTS, INC.
8439 White Oak Ave., Suite. 105
Rancho Cucamonga, Ca 91730
Tel. 909-980-1361 ▪ Fax. 909-944-5814
e-mail. pjpaia@pitassiarchitects.com

CONSULTANT:
TMAD TAYLOR & GAINES
▪ STRUCTURAL ▪ MECHANICAL ▪ ELECTRICAL ▪ CIVIL
800 North Ferrari Lane, Suite 100
Ontario, California 91764
Phone: 909.477.6915 Fax: 909.477.6919
www.tmadtg.com Project No. 4008.056.00


# PERRIS VALLEY Big League Dreams

2155 Trumble Road
Perris, California 92570

SHEET TITLE

100% CONSTRUCTION DOCUMENT

| DATE | REVISIONS |
|---|---|
| | |

STAMP

REGISTERED PROFESSIONAL ENGINEER
TERRY C. TSANG
No. S2992
Exp. 06/30/09
STRUCTURAL
STATE OF CALIFORNIA

| CHECKED BY | DATE |
|---|---|
| SY | . |
| DATE 01-07-10 | FILE NAME |
| DRAWN BY DG | SHEET |
| JOB NO. 05208.00 | S-4.6 |
| SCALE NOTED | OF SHEETS |