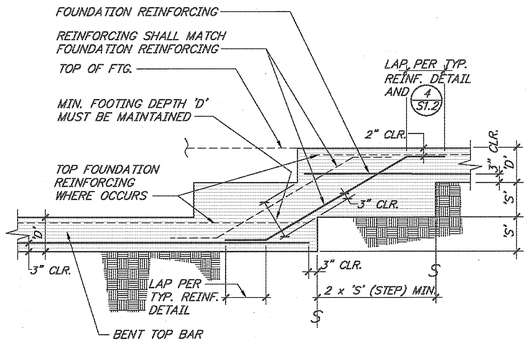


'S' (FOOTING STEP = 1'-6" MAX.)

NOTE: 1. S FOOTING STEP SHOWN THUSLY ON PLANS

2. STEP FOOTING WHERE SHOWN ON PLANS, AND AS REQUIRED TO MAINTAIN MINIMUM FOOTING DEPTH BELOW GRADE, AND AS REQUIRED TO ACCOMMODATE PIPES PER TYPICAL PIPE TRENCH DETAIL.

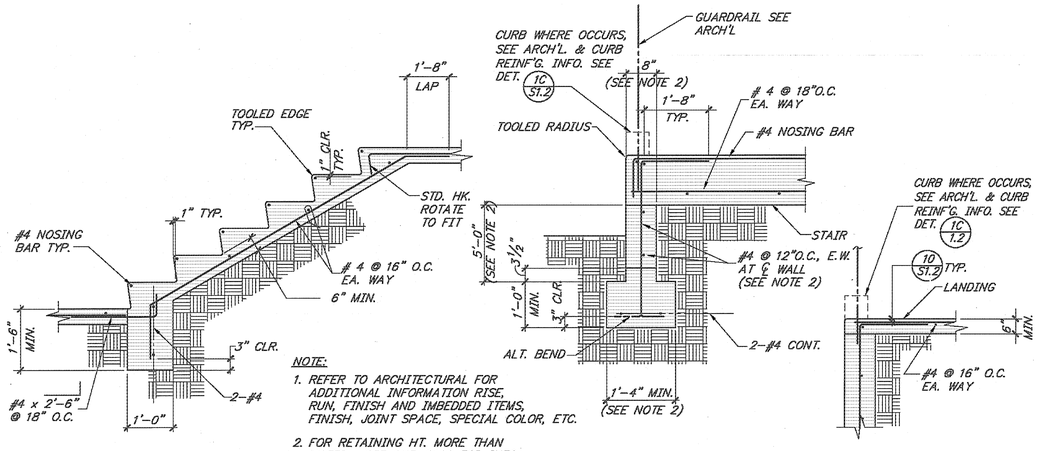


NOTE:

1. REFER TO ARCHITECTURAL FOR ADDITIONAL INFORMATION RISE, RUN, FINISH AND IMBEDDED ITEMS, FINISH, JOINT SPACE, SPECIAL COLOR, ETC.
2. FOR RETAINING HT. MORE THAN NOTED. SEE SHT. S109 FOR INFO.
3. DIMENSION INDICATED ARE MIN. COORD. WITH MANUF. BASE PLATE AND BOLT PATTERN FOR MININUM CONCRETE PEDESTAL REQUIREMENT.

AT STAIR 'A'

AT LANDING 'B'

NOTE: SIM. TO CONDITION AT STAIR

| NOT USED | - | 1 | TYPICAL STEP FOOTING DETAIL | NONE | 2 | TYPICAL STAIR ON GRADE | NONE | 3 |
|---|---|---|---|---|---|---|---|---|

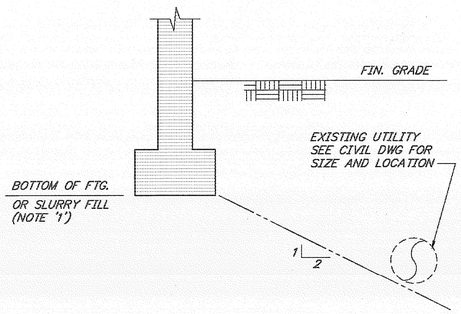


NOTE:

1. THE CONTRACTOR TO LOCATE BOTTOM OF FOOTING ELEVATION TO AVOID SURCHARCHING ON EXISTING SUBGRADE UTITITIES.
2. NEW UTILITIES ARE SIMILAR

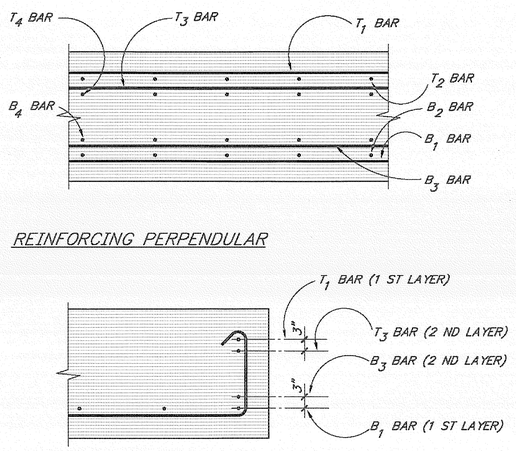


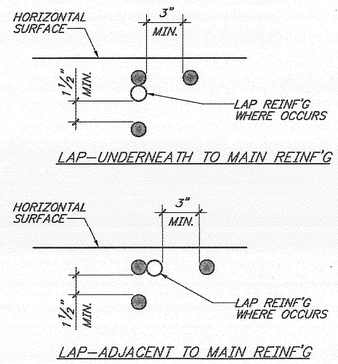


NOTES:

1. MAXIMUM CAPACITY FOR OVERHANG CASE—WORK =300#/FT. APPLIED MAXIMUM 9" FROM FACE OF STUD. THIS CAPACITY IS BASED ON MINIMUM OF TWO BACK-INGS (ONE AT TOP ONE AT BOTTOM OF CASEWORK). CASE WORK CONNECTION SPACING SHALL NOT EXCEED 16".
2. CASEWORK LOADS ARE BASED ON 50 PCF
3. SPECIAL DESIGN MUST BE PROVIDED FOR THE ENGINEER OF RECORD TO REVIEW IF THE CASE—WORK OR ANY EQUIPMENT HANGING ON THE WALL WEIGHS MORE THAN MAXIMUM CAPACITY AS SHOWN ABOVE.
4. AT FLOOR MOUNTED CABINETS, SPACE CONT. BACKING AT 6"± FROM TOP OF CABINETS.
5. PROVIDE MIN. ANCHORAGE ATTACHMENT OF CABINET W/ SHEET METAL SCREWS PER ARCH.

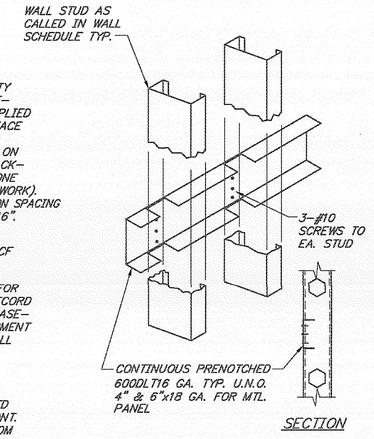


| FOOTING PARALLEL TO (E) UTILITY | NONE | 4 | TYP. REINF. PLACEMENT DETAIL | NONE | 5 | TYPICAL DETAIL FOR LAP PLACEMENT | NONE | 6 | STUD BACKING DETAIL | NONE | 7 |
|---|---|---|---|---|---|---|---|---|---|---|---|

(A) SATISFACTORY MATERIAL, COMPACTED TO MIN. 95% OF LABORATORY MAXIMUM DENSITY PER ASTM D 1557-91

(B) 2" COARSE SAND ON VAPOR BARRIER ON 2" SAND – ALL SLABS ON GRADE. SEE 1/S1.2

(C) EXCAVATE, SCARIFY AND RECOMPACT THE TOP 2'-0" MIN. OF SURFACE SOILS OVER THE ENTIRE SITE EXCEPT THE LANDSCAPED/PLANTER AREAS.

(D) SLAB ON GRADE, SEE 1/S1.2

NOTE:

1. IN FILL AREAS, THE ALLUVIAL SOILS OR EXISTING FILL SHALL BE EXCAVATED A MINIMUM OF TWO (2) FEET PRIOR TO PLACING ANY COMPACTED FILL.
2. CUT AREAS SHALL BE OVER EXCAVATED AN ADDITIONAL THREE (3) FEET BELOW FINISH GRADE PRIOR TO PLACING ANY COMPACTED FILL.
3. BACKFILL SHALL BE OF SATISFACTORY BACKFILL MATERIAL, COMPACTED TO A MIN. 95% IN 8" LIFTS.

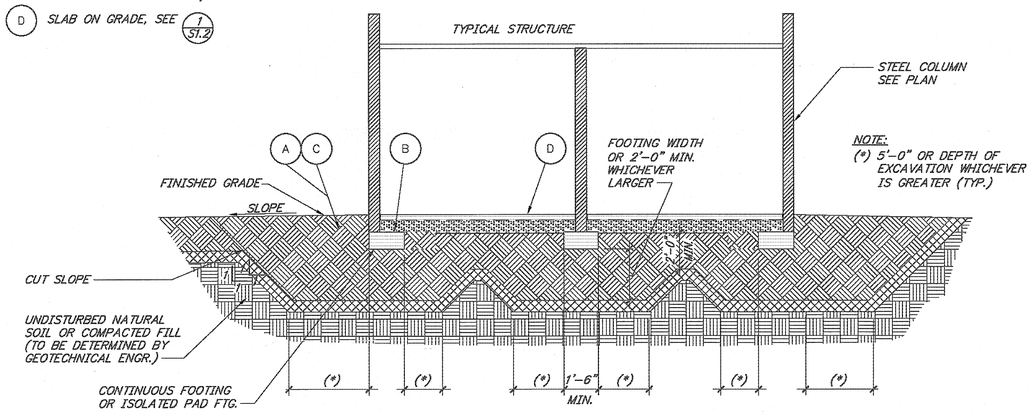


NOTE:
(*) 5'-0" OR DEPTH OF EXCAVATION WHICHEVER IS GREATER (TYP.)

| SITE PREPRATION FOR FOOTING AND SLAB ON GRADE | NONE | 8 | NOT USED | - | 9 | NOT USED | - | 10 |
|---|---|---|---|---|---|---|---|---|


MIG
MOORE IACOFANO GOLTSMAN, INC.
801 N. HARBOR BLVD. FULLERTON, CA 92831
TEL 714/871-3535 FAX 714/871-1189
www.migcorp.com

PITASSI ARCHITECTS, INC.
8439 White Oak Ave., Suite. 105
Rancho Cucamonga, Ca 91730
Tel. 909-980-1361 ▪ Fax. 909-944-5814
e-mail. pjpala@pitassiarchitects.com

CONSULTANT:
TMAD TAYLOR & GAINES
▪ STRUCTURAL ▪ MECHANICAL ▪ ELECTRICAL ▪ CIVIL
800 North Ferrari Lane, Suite 100
Ontario, California 91764
Phone: 909.477.6915 Fax: 909.477.6919
www.tmadtg.com Project No. 4008.056.00


# PERRIS VALLEY Big League Dreams

2155 Trumble Road
Perris, California 92570

SHEET TITLE

100% CONSTRUCTION DOCUMENT

| DATE | REVISIONS |
|---|---|
| | |

STAMP

REGISTERED PROFESSIONAL ENGINEER — SERRY C. TSANG — No. S3992 — Exp. 06/30/2010 — STRUCTURAL — STATE OF CALIFORNIA

| CHECKED BY | DATE |
|---|---|
| SY | . |
| DATE 01-07-10 | FILE NAME |
| DRAWN BY DG | SHEET |
| JOB NO. 05208.00 | S-1.3 |
| SCALE NOTED | OF SHEETS |